XII. *A New Current Weigher and a Determination of the Electromotive Force of the Normal Weston Cadmium Cell.*

By Professor W. E. AYRTON, *F.R.S., and* T. MATHER, *F.R.S., Central Technical College, London, and* F. E. SMITH, *A.R.C.S., National Physical Laboratory, Teddington.*

Received June 5,—Read June 27, 1907.

[PLATES 7–8.]

PRINCIPAL CONTENTS.

HISTORICAL NOTES ON THE ABSOLUTE MEASUREMENT OF CURRENT.

A CURRENT can be measured absolutely in the electro-magnetic system of units either by means of the action of the current on a magnet, or of the current on a current. The former method has the disadvantage that at least two independent measurements are necessary. For example, in using an electro-magnetic balance, the strength of the magnet acted on by the electric circuit has to be determined, as well as the force exerted on the magnet by the circuit. In galvanometers, either of the sine or tangent type, the magnetic field produced by the electric circuit is compared with the earth's horizontal field, the strength of which is determined independently. Further, as the strength of artificial magnets cannot be regarded as truly constant, and the earth's field is subject to diurnal and secular variations, this class of measurement is not ideal.

In the electrodynamic class of measurement the mutual action between two or more coils carrying current takes the form of a torque, as in electrodynamometers, or a direct force, as in current weighers. In electrodynamometers the torque may be measured with a bifilar suspension, the torsion of a wire or spring, or by means of a gravity balance. Current weigher measurements are almost always made by direct comparison with gravity, which is believed to be constant, and is known to a higher degree of accuracy than the strengths of any magnet or magnetic field that has yet been measured.

Shortly after the absolute system of units was devised by GAUSS and WEBER in 1832, A. BECQUEREL* weighed the attraction between a coil and a magnet; and two years later LENZ and JACOBI† used and modified BECQUEREL'S balance by arranging a coil and magnet at each end of the beam. In 1840 W. WEBER determined the electrochemical equivalent of water, using the tangent galvanometer as his instrument for measuring current; and in 1843 similar measurements were made by BUNSEN and by CASSELMANN, followed in 1851 by JOULE.

Meanwhile W. WEBER‡ had, in 1846, invented his two forms of electrodynamometer, one with the suspended coil inside, and the other with this coil outside the fixed coil, and he measured the torque with bifilar and unifilar suspensions.

The first current weigher appears to have been constructed by CAZIN§ in 1863. This consisted of two rectangular coils with their planes horizontal, one hanging from the beam of a balance directly above the other, which was supported on an adjustable table. The instrument was used for determining the electrochemical equivalent of water.

In 1864 JOULE|| made a current weigher having three circular flat coils wound with copper strip, one being suspended from a balance, so that its mean plane, which was horizontal, was midway between those of the other two fixed coils. This instrument had the correction to its principal constant determined by comparison with a standard tangent galvanometer, and was employed in JOULE'S electrical determination of the mechanical equivalent of heat. Its object was to enable a constant current to be maintained through the calorimeter, independent of variations in the earth's magnetic field.

LATIMER CLARK,¶ in determining the E.M.F. of his standard cell in 1872, used a bifilar electrodynamometer with circular fixed and moving coils, each arranged in the Helmholtz fashion. The fixed coils were of large size relative to the suspended ones, a fact which considerably simplified the calculation of the torque per unit current. The instrument had been constructed for the Electrical Standards

---

* 'Comp. Rend.,' vol. V., p. 35, 1837.

† 'POGG. Ann.,' XLVII., p. 227, 1839.

‡ 'Electrody. Mess.,' Vol. I., p. 16, 1846.

§ 'Ann. de Chim.,' [4], Vol. I., p. 257.

|| 'B.A. Report,' 1864.

¶ 'Roy. Soc. Proc.,' May 30, 1872; also 'Phil. Trans.,' 1874, Part I.

Committee of the British Association, and was wound by CLERK MAXWELL. LATIMER CLARK also used a sine galvanometer for his E.M.F. measurements, and arrived at the values 1·4573 and 1·4562 B.A. volts at 15·5° C. with the two methods respectively.

In 1873 F. KOHLRAUSCH* employed the tangent galvanometer and magnetometer in determining the electrochemical equivalent of silver, which he found to be 1·1363 milligrammes per coulomb.

MASCART,† in 1882, constructed his current weigher formed of a long solenoid hung from a balance arm, with its lower end in the mean plane of a large circular coil, and published the number 1·124 milligrammes as the mass of silver deposited by one coulomb. This was corrected in 1884 to 1·1156.‡

At the British Association Meeting in 1882 § Lord RAYLEIGH discussed the several methods of measuring current absolutely which had been employed by previous experimenters, more especially those used by KOHLRAUSCH and by MASCART. He pointed out that a large part of MASCART'S long solenoid was comparatively ineffective, and considered that the moving coil should be compact and situated near the position of maximum effect. A further advantage would, he pointed out, be gained by duplicating the fixed coil, thus making the arrangement symmetrical and doubling the force. The dimensions of $(\text{current})^2$ in the electromagnetic system being the same as those of force, Lord RAYLEIGH showed that the constant of a current weigher arranged as described above, must be a numeric, depending on the mean radii of the coils as a ratio, which could be determined electrically with high precision without any linear measurements whatever having to be made.

In 1883 Lord RAYLEIGH published the result that he had obtained with a current weigher thus constructed, viz., 1·119 || milligrammes of silver per coulomb. Meanwhile F. and W. KOHLRAUSCH had carried out measurements of high precision with the tangent-galvanometer and suspended-coil method, obtaining the values 1·11833 and 1·11822 respectively in 1881 and 1883, although these results were not published until later.¶

In a classical memoir** Lord RAYLEIGH and Mrs. SIDGWICK showed that the number given by Lord RAYLEIGH in 1883, viz., 1·119, was too high by nearly 1 in 1000, owing to inclusion of mother liquor with the silver. This was due chiefly to the solution being filtered through silver acetate to secure firmer deposits. With pure silver nitrate they found the equivalent to be 1·11794, the greatest difference from the mean of thirteen experiments being less than 1 part in 2500. The paper contains a full description of the current weigher, the method of using it, the calculation of the force between the coils, and a table of numbers for facilitating the making of these calculations by elliptic integrals. Also a very careful determination of the E.M.F. of a number of CLARK cells is given. It is important to notice that no measurements of length, moment of inertia, or time are necessary in determining current with a current weigher made on Lord RAYLEIGH'S plan, and this constitutes one of its great advantages.

THOMAS GRAY, in 1886,†† determined the electrochemical equivalent of silver by means of a sine galvanometer of his own design, and in 1887 KOEPSEL‡‡ used an electromagnetic balance of most ingenious construction, made according to VON HELMHOLTZ'S instructions, for the same purpose. The results obtained, although approximating closely to those of F. and W. KOHLRAUSCH, and of Lord RAYLEIGH and Mrs. SIDGWICK respectively, are not so trustworthy.

---

* 'POGG. Ann.,' 149, S. 170, 1873.

† 'Jour. de Phys.,' [2], t. I., p. 109, 1882.

‡ 'Jour. de Phys.,' t. III., p. 283, 1884.

§ 'B.A. Report,' p. 445, 1882.

|| 'Proc. Cambridge Philosophical Society,' vol. V., p. 50.

¶ 'Sitz. der Phys.-Med. Ges. zu Würzburg,' 1884; also 'WIED. Ann.,' 27, p. 1, 1886.

** 'Phil. Trans.,' 175, p. 411, 1884.

†† 'Phil. Mag.,' 22, p. 339, 1886.

‡‡ 'WIED. Ann.,' 31, p. 250, 1887.

In 1890 PELLAT and POTIER* employed an electrodynamometer balance in silver deposit work, which had a short cylindrical coil secured with its axis vertical to one arm of a balance; this arm projected along the axis of a long horizontal solenoid fixed symmetrically with respect to the moving coil. The torque between the coils was balanced by weights, the magnitude of which gave 1·1192 as the mass of silver deposited per coulomb.

With a view to simplifying the use of RAYLEIGH'S current weigher, HEYDWEILLER† in 1891 modified the arrangement by placing the coils with their common axis horizontal, the moving coil being carried directly below the centre of the balance beam. Nearly the whole of the force was balanced by weights on the horizontal arm, and the rest determined from the slight displacement of the coil from the vertical position.

To determine the E.M.F. of CLARK cells in 1896 KAHLE‡ used a HELMHOLTZ electrodynamometer balance of novel construction, in which the moving coil and balance beam were supported by, and so that they rolled on, thin metal strips which served also as leads. Rectangular coils of many turns embraced the balance case in planes perpendicular to the length of the beam. The constants of these coils, as well as of the suspended one, were determined by comparison of their magnetic effect with that of a large rectangle of copper band stretched round a strong metal frame, the dimensions of which could be accurately measured. The experiments gave the result 1·4322 at 15° C.

In 1897 the late Professor J. VIRIAMU JONES, in collaboration with one of the authors (W. E. A.), devised a current weigher in which the forces could be calculated with great exactness by a formula developed by the former,§ and a preliminary instrument was constructed with single layers of wire in screw grooves, and described at the British Association Meeting in 1898.||

Messrs. PATTERSON and GUTHE,¶ working under Professor CARHART, employed a torsion electrodynamometer with fixed coils on wood and suspended coil on vulcanite, and made determinations of silver deposit (1·1192 milligrammes per coulomb) which they believed accurate to 1 part in 5000. In the following year (1889) CARHART and GUTHE** measured the E.M.F. of CLARK cells with the same instrument, obtaining the value 1·4333 at 15° C., and in 1902 CALLENDAR†† published the result (1·4334 at 15° C.) got by R. O. KING with an electrodynamometer of the British Association pattern employed in his (CALLENDAR'S) researches on "Continuous Electric Calorimetry."

Further determinations of the electrochemical equivalent of silver with PELLAT'S electrodynamometer balance were made in 1903 by PELLAT and LEDUC,‡‡ who obtained 1·1195 milligrammes per coulomb. In the same year VAN DIJK and KUNST §§ carried out a very careful research in a new laboratory free from iron and vibration, using two tangent galvanometers, magnetometer and variometer, and from the mean of twenty-four closely accordant determinations of the electrochemical equivalent of silver deduced the value 1·11818. This they believed to be accurate to 1 part in 10,000.

Professors CARHART and PATTERSON|||| described, at the meeting of the Electrical Congress at St. Louis

---

* 'Jour. de Phys.,' t. VI., p. 175, and t. IX., p. 381, 1890.

† 'WIED. Ann.,' 44, p. 533, 1891.

‡ 'WIED. Ann.,' 59, p. 532, 1896.

§ 'Roy. Soc. Proc.,' vol. 63, p. 204, 1898.

|| 'B.A. Report,' Bristol, 1898, p. 157; also 'Jour. Inst. Elec. Eng.,' vol. 35, p. 12, 1905.

¶ 'Phys. Rev.,' VII., p. 257, 1898.

** 'Phys. Rev.,' IX., p. 288, 1899.

†† 'Phil. Trans.,' A., 199, p. 81, 1902.

‡‡ 'Comp. Rend.,' 136, p. 1649, 1903.

§§ 'Versl. van de Gewone Vergadering der Wis- en Natuurkundige Afdeeling,' Dec., 1903.

|||| 'Jour. Inst. Elec. Eng.,' vol. 34, p. 185, 1905.

in 1904, a new torsion electrodynamometer of the GRAY* pattern, having single-layer coils on cylinders of Paris plaster. Experiments on CLARK and cadmium cells were then in progress.

Last year (1906) GUTHE† published the results of a lengthy research on CLARK and cadmium cells in which another GRAY electrodynamometer was employed. He arrived at the values 1·43296 at 15° C. and 1·01853 at 20° C. for the respective cells, and deduced from this and previous work 1·11773 milligrammes per coulomb as the electrochemical equivalent of silver. The instrument employed by GUTHE suffers from non-uniformity of winding, but this was allowed for approximately. Its influence on the accuracy of the electrodynamometer is discussed by ROSA in the same number of the 'Bulletin' (p. 71).

SECTION 1.—INTRODUCTORY.

The instrument herein described is the outcome of conversations between the late Professor J. VIRIAMU JONES and one of the authors (W. E. A.) on their return from the British Association meeting, held in Toronto in 1897.

Absolute determinations of resistance had been made on many occasions, and with considerable precision, whilst those of current were comparatively few; the want of agreement between the results obtained by different observers was by no means satisfactory. It was therefore decided to make a new determination of the ampere by means of a current weigher formed of coils with single layers of wire, such as had been so successfully employed by Professor JONES in his determination of the "Specific Resistance of Mercury in Absolute Measure" ('Phil. Trans.,' A, 1891), and by Professors AYRTON and JONES in their determination of the ohm at the Central Technical College, London, in 1897.‡

By using coaxial coils, with single layers of wire wound in screw-thread grooves, advantage could be taken of the convenient formula developed by Professor JONES for calculating the electro-magnetic force between a helix and a circular current sheet,§ viz.,

$$F = \gamma_h \gamma (M_2 - M_1),$$

where γ_h is the current in the helix, γ the current per unit length of the current sheet, and M_1, M_2 the coefficients of mutual induction of the helix and the two circular ends of the current sheet.

To test the stability of the proposed current weigher, or "ampere balance" as it is frequently called, as well as to get experience regarding the conditions necessary for successful operation, a preliminary apparatus was constructed at the Central Technical College in 1898, and there used to make an approximate

---

* 'GRAY'S Absolute Measurements, &c.,' vol. 2, part 1, p. 274.

† 'United States Bureau of Standards Bulletin,' vol. 2, No. 1, p. 33, 1906.

‡ 'B.A. Report,' Toronto, p. 212, 1897.

§ "On the Calculation of the Coefficient of Mutual Induction of a Circle and a Co-axial Helix, and of the Electromagnetic Force between a Helical Current and a Uniform Co-axial Circular Cylindrical Current Sheet," 'Roy. Soc. Proc.,' vol. 63, p. 204, 1898.

determination of the electro-chemical equivalent of silver.[*] In this instrument the coils were formed by winding insulated wire in the grooves of screw threads cut in metal cylinders, but the springiness of the covering prevented very exact measurements of the dimensions being made. To obtain greater precision, it was decided to use, in the proposed balance, bare wire wound on insulating material, as originally employed in the Lorenz apparatus designed by Professor J. V. JONES for the McGill University, Montreal, and to avoid the uncertainty as to leakage between adjacent turns of such a spiral[†] the arrangement devised by one of the authors (W. E. A.) of having double-threaded screw grooves wound with separate bare wires, subsequently connected in series after the insulation resistance between them had been made satisfactory, was adopted.

Experience with the preliminary apparatus showed that air convection currents should be minimised, and that easy access to, and independent adjustments of, both fixed and suspended coils were very desirable. In designing the new current weigher, in collaboration with the late Professor JONES, these points were kept in view, and the arrangements chosen were such as would take full advantage of the mechanical precision attainable with modern machine tools, a subject which Professor JONES had very much at heart. In fact, he had long advocated that the instruments employed in realising the concrete values of the electrical units from their absolute definitions should be engineering tools rather than ordinary physical laboratory apparatus.

Complete working drawings and specifications of the proposed instrument, and its adjustable support, were prepared at the Central Technical College during the Session 1898–99, the drawings being made by Mr. J. P. GREGORY, then a student of the College, and now of the British Thomson Houston Co., Rugby. Tenders were obtained for the construction of the instrument, to defray the cost of which the British Association for the Advancement of Science made a grant of £300.[‡]

As the amounts of the tenders for the balance, and the adjustable phosphor-bronze stand for supporting it, much exceeded the above-named sum, Sir ANDREW NOBLE, F.R.S., was approached, and took so much interest in the apparatus and the important work that was to be carried out with it, that he generously presented the carefully made adjustable support, constructed by Messrs. SIR W. ARMSTRONG, WHITWORTH and Co., Limited, free of cost.

The physical balance was built by Mr. L. OERTLING, of London, and the electrical portions were made at the National Physical Laboratory, under the supervision of the Director, Dr. R. T. GLAZEBROOK, F.R.S.

We may here remark that the current weigher has proved to be the most perfect absolute electrical instrument hitherto constructed, and has enabled us to determine

---

[*] 'B.A. Report,' Bristol, 1898, p. 157; also 'Jour. Inst. Elec. Engrs.,' vol. 35, p. 12, 1905.

[†] This uncertainty necessitated the removal of the original winding of the Lorenz apparatus, and rewinding with silk-covered wire. See 'Jour. Inst. Elec. Engrs.,' vol. 35, p. 13.

[‡] 'B.A. Report,' 1898, p. 147.

the ampere to a very high degree of accuracy. In fact, this unit is now known with a precision considerably greater than any other electrical quantity of which absolute measurements have been made.

Section 2.—General Description.

The instrument consists of a very sensitive physical balance supporting a coil with vertical axis from each end of the beam, these coils hanging coaxially within fixed coils carried from the base of the balance. A diagrammatic sketch of the arrangement is shown in fig. 1, and a view of the complete instrument in fig. 2, Plate 7.

From the former it will be seen that the current flows in opposite directions in the upper and lower parts of the outer coils. On the left-hand side of fig. 1 the current in the upper half of the outer coil flows clockwise (looking from above) and in the lower half counter-clockwise, whilst in the left-hand suspended coil the circulation is shown clockwise. The tendency is, therefore, to lift the suspended coil SL. It will also be seen that the outer coils on the right will tend to depress the suspended coil SR, so that the two sets of coils exert a clockwise torque on the beam. This torque is balanced by weights added to or taken from scale pans supported independently on the knife edges which carry the suspended coils, an arrangement which avoids displacement of the suspended coils when the weights are placed or removed.

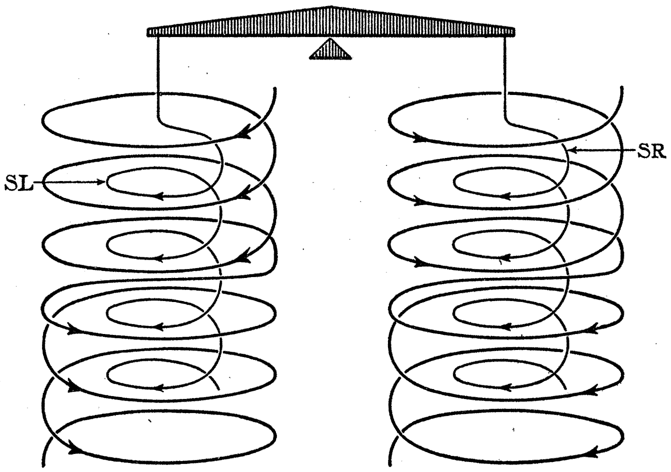

Fig. 1. Diagram of windings.

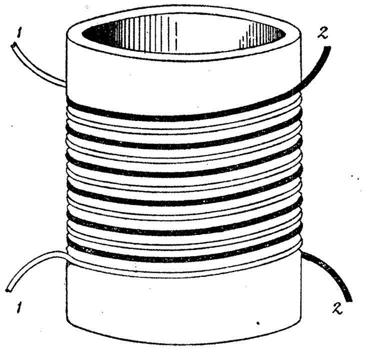

Fig. 3. Diagram showing hollow cylinder with double winding in grooves of screw threads.

All the coils are wound with bare wire on hollow marble cylinders, having double-threaded screw grooves cut on the surfaces, into which separate wires are laid as shown in fig. 3. In this figure one wire is indicated by two thin lines, and the other is shown thick. The two wires, hereafter distinguished as No. 1 and No. 2, form two adjacent helices, which, in the use of the instrument, are connected in series and act as one coil. They can, however, be readily disconnected from each other and an insulation test made between them. This applies to each of the six coils forming the current weigher, arrangements being made whereby the six No. 1 wires may be connected together, the six No. 2 wires similarly grouped, and the insulation between adjacent wires of the whole instrument tested simultaneously. Any leakage between the two adjacent helices can thus be readily detected and localised and remedied.

Each of the fixed cylinders carries four helices, two upper and two lower, and each suspended cylinder two. There are therefore twelve helices in all, and these are connected in series in the normal use of the current weigher by means of small concentric cables running to a plug board and commutators outside the balance case. Flexible connections are used as leads and returns to and from the suspended coils. The commutators enable the direction of the current in any coil to be changed at will. By reversing the current in the coils on the fixed cylinders the forces between the fixed and suspended coils are reversed, and the apparent change of weight thus produced is a measure of the square of the current used.

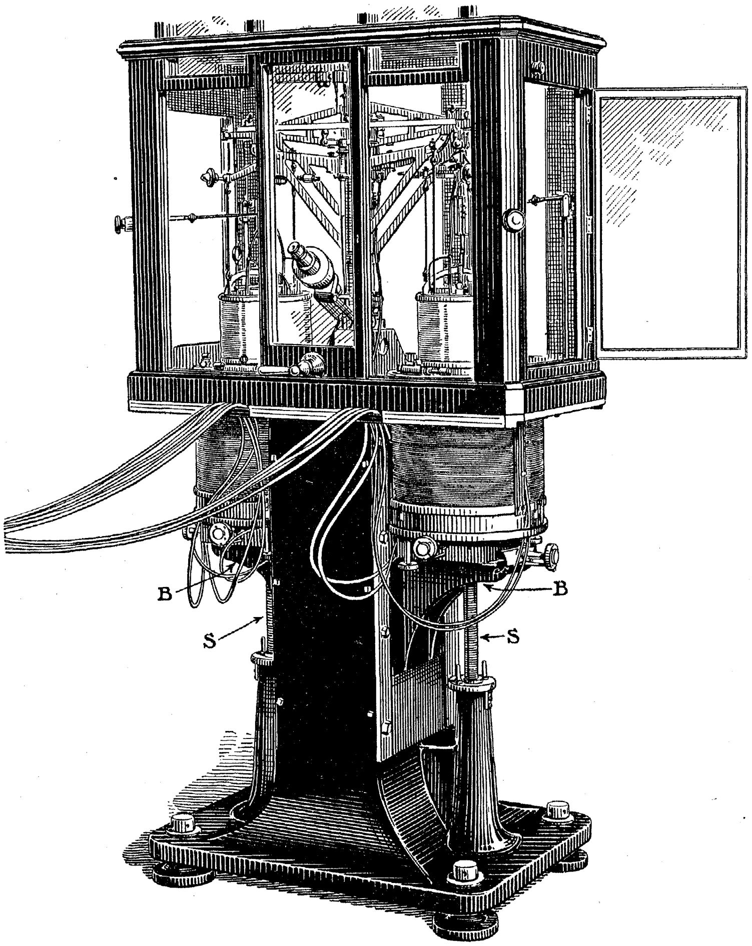

Fig. 4. General view of instrument, showing outer coils lowered.

The position of the balance beam is observed by viewing a finely divided scale carried by the pointer through a microscope seen in fig. 2, Plate 7, and in fig. 4.

A double glazed case or cover, with $\frac{3}{8}$-inch air space between the sheets, resting on a phosphor-bronze plate, serves to exclude dust and draughts, and to minimise convection currents which may be caused by unequal radiation or conduction from surrounding objects.

The whole instrument is supported on an adjustable phosphor-bronze stand or pedestal at a convenient height (see fig. 4), levelling screws being placed at the corners of the base.

SECTION 3.—ADJUSTABLE SUPPORT FOR BALANCE.

On opposite sides of the central pillar of the pedestal (see fig. 4) are sliding brackets BB, like the tables of small milling machines, which can be lowered through distances of about 14 inches (35 centims.) by means of vertical screws SS. Each bracket supports a slide rest having a circular top-plate which can be moved half-an-inch horizontally in two directions at right angles by means of screws with graduated heads. The nuts on the vertical screws are of large diameter, and they and the heads of the horizontal screws are divided to read thousandths of an inch. As each division can be subdivided by eye to tenths, it is possible to read the position of either fixed cylinder to a ten-thousandth of an inch.

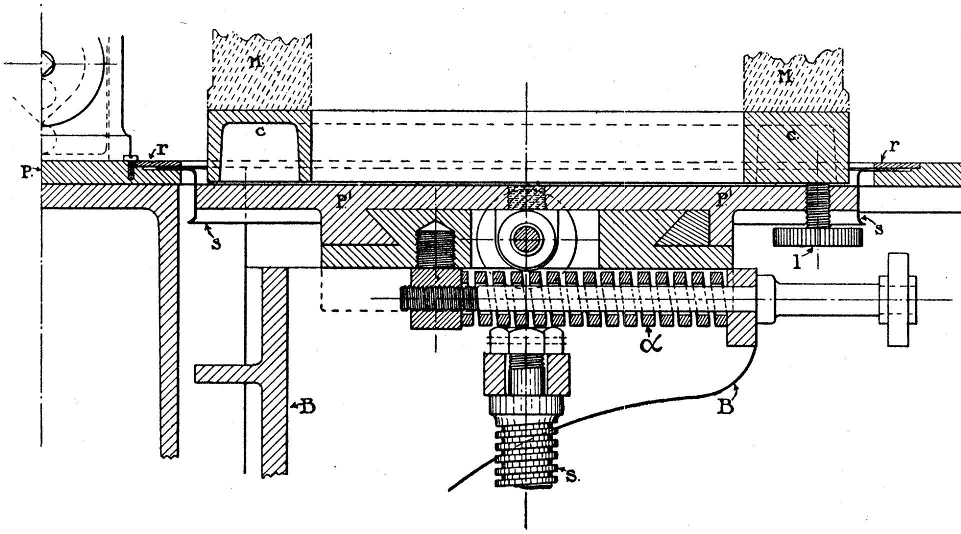

Fig. 5. Section through top-plate of slide rest for supporting fixed cylinders.

The weights of the fixed cylinders and brackets are sufficient to overcome the friction in the vertical slides and thus avoid backlash in these motions. In the horizontal movements backlash is avoided by using strong phosphor-bronze springs shown at α, fig. 5, capable of moving the corresponding slide when tightened up to prevent shake and loaded with a fixed cylinder. These springs keep the horizontal screws always in tension.

When the brackets B, figs. 4 and 5, are near their highest positions, the circular top-plates P′P′ of the slide rests project through holes in the phosphor-bronze plate, PP, fig. 5, which forms the base of the balance. Copper spinnings *s* of section ˥ fit closely round the top-plates, and can slide between the plate P and ring *r*, thus forming a draught-tight joint, and at the same time permitting horizontal motion of about half-an-inch in any direction.

For supporting the marble cylinders M, fig. 5, annular phosphor-bronze castings C, of inverted channel section, rest on fine-threaded levelling screws *l*, projecting through the top-plates of the slide rests, the heads being below the plates, so that levelling can be done from beneath the balance case. This arrangement is on the "hole, slot and plane principle," to avoid constraint and yet ensure precision in position.

SECTION 4.—THE PHYSICAL BALANCE.

A photograph of the instrument, without coils, is shown in fig. 6, Plate 8. It has a beam 20 inches (50·8 centims.) long, capable of supporting 5 kilogrammes at each end, and turning with about one-tenth of a milligramme, a rider beam, divided into 100 parts on each side, and two rider carriers are fitted. All the knife edges and planes are of agate, and as fine as possible consistent with the loads they have to carry.

From each of the outer knife edges K there depends a three-armed spider S, with heavy nuts N at the end of each arm, and adjustable hooks *a*, *a*, from which the corresponding suspended cylinder hangs on three phosphor-bronze wires w, w, w. The object of the nuts is to enable the suspended cylinder to be levelled, two very sensitive levels being fixed to the cylinder for this purpose.

Below the suspended cylinder, and quite clear of it, is a copper disc *d*, fig. 6, carried by three wires w′, w′, w′ attached to the clamping beam F of the balance, for supporting the cylinder should one of the wires w, w, w become unhooked.

The scale pans for carrying the weights used to balance the forces exerted by the coils, hang from separate planes on the same knife edges as support the suspended cylinders. These may be seen in fig. 7, where K is the knife edge, H is the hook carrying the spider S, and *h* the hook supporting the scale pan *p*. This arrangement is novel, and of considerable utility, for it permits of removal or replacement of the weights without affecting the levelling of the suspended cylinder. Its adoption, however, necessitates the perfect straightness of the knife edges. This condition has been satisfied to a very high degree of accuracy by Mr. OERTLING, for shifting a weight of 16 grammes from the scale pan to the cylinder produced no appreciable difference in the rest-point of the balance, when the sensitiveness was such that one-tenth of a milligramme could be detected.

As will be seen from figs. 2, 6, and 7, the scale pans are of unusual shape. Rods

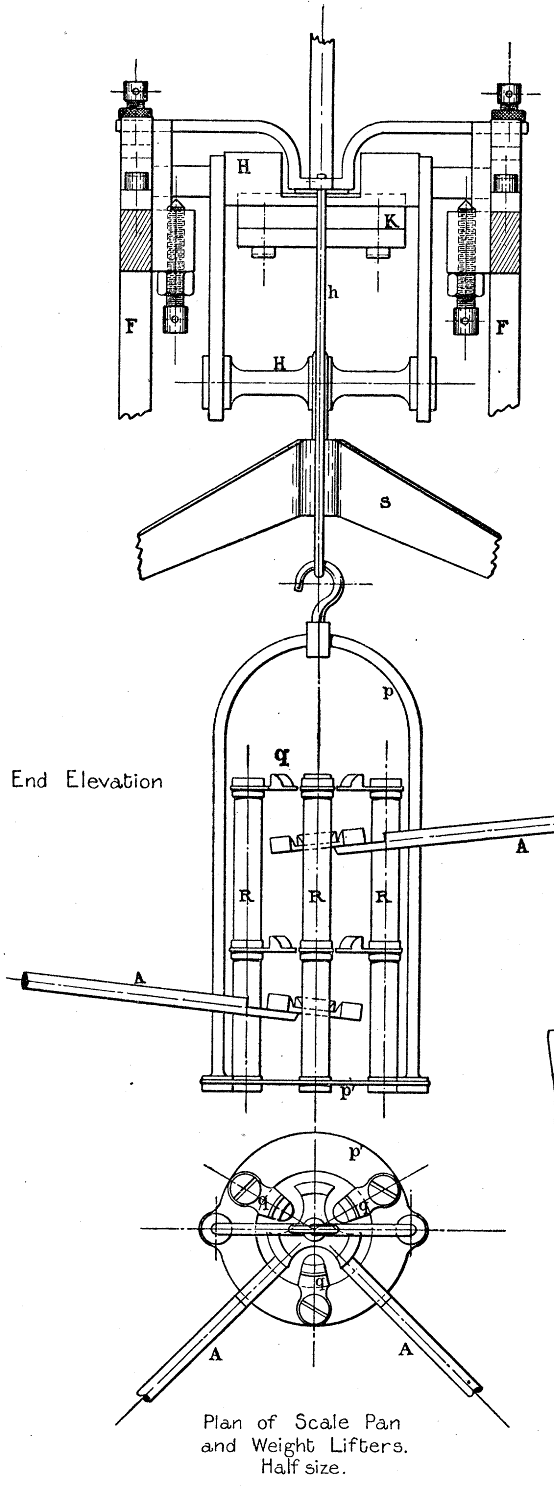

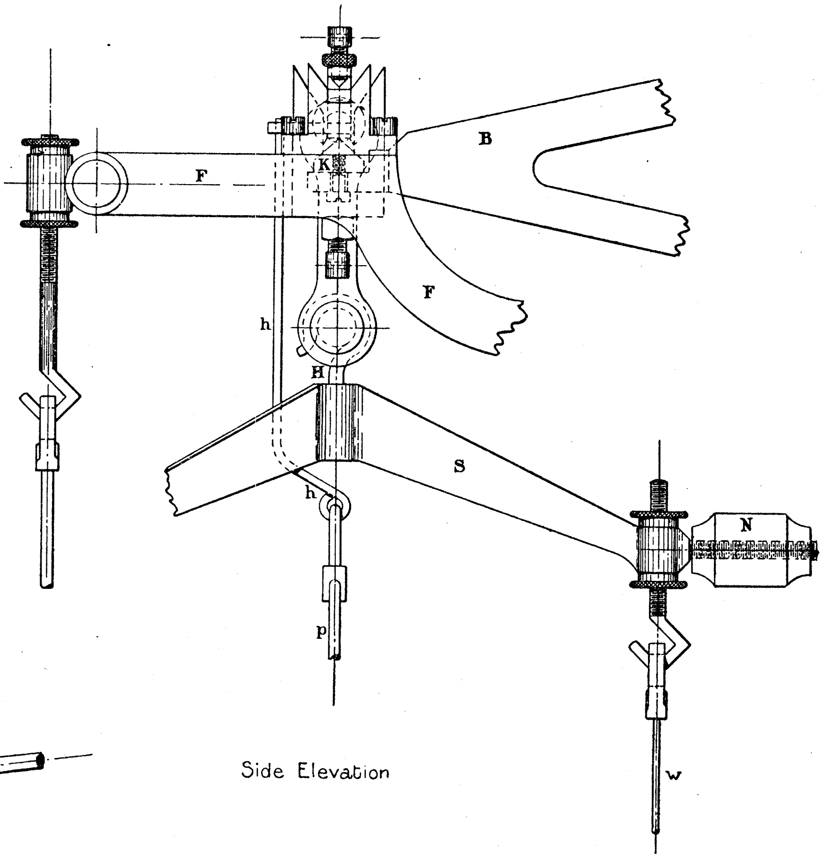

Fig. 7. End and side elevations to show mode of supporting scale pan and spider from same knife edge.

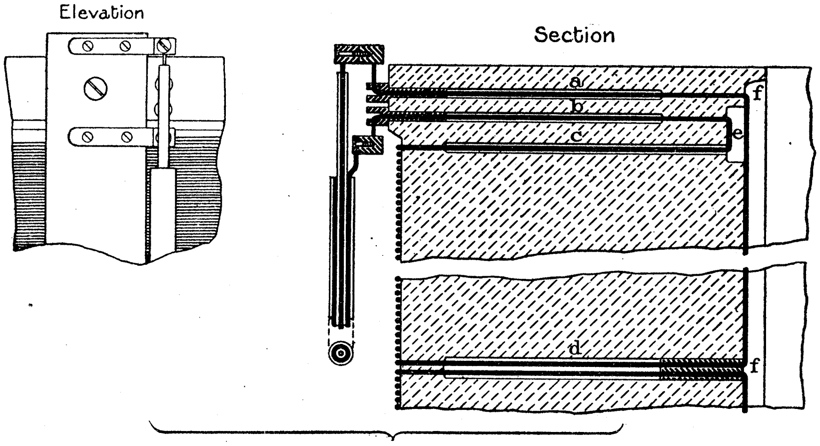

Fig. 8. Arrangement of leads to coils on fixed cylinders.

R, R, R, fig. 7, project upwards from the plate p', and from the middle and upper ends of these rods sector-shaped pieces q project inwards and form tripods on which the weights may rest. Claw-shaped lifters on the arms A, A, figs. 6 and 7, are operated by cams C fixed in the corners of the balance case, and serve to remove or replace the weights. The arrangement is very convenient, and works with perfect smoothness, the result of the excellent workmanship of Mr. Oertling. Two weights and two lifters are provided at each end of the balance. These may be seen in the end view of the instrument shown in fig. 7*a*, Plate 8, and also in fig. 6.

Another novel feature of the balance is the arrangement employed for taking the beam off the centre agate plane and fixing it in the zero position without appreciably raising or lowering the suspended cylinders. This is of considerable importance, as it allows of the coils being levelled and adjusted vertically to the sighted position, without continually clamping and freeing of the beam for making and testing the adjustment. The specification for the balance stated that "the displacement of the suspended coils caused by fixing the beam must not exceed 4 mils (one-tenth of a millimetre)." Mr. Oertling has, however, used a construction which reduces the displacement to a far lower figure, as the fixing is effected without raising the beam more than 0·004 millim. (4 microns), and the planes carrying the suspended coils are clamped with a movement less than 0·08 millim.

The handle seen at the front of the case in figs. 2 and 6 actuates the clamping arrangements. Turning it clockwise through 180° from the position shown lowers the whole clamping beam F, fig. 6, thus bringing the centre knife edge against its plane, and allowing the planes supporting the scale pans and cylinders to rest on the end knife edges. By sliding inwards a tube surrounding the horizontal clamping axle, and turning the handle through another 90°, two agate hemispheres m, m are brought into contact with agate planes on the beam immediately above them and fix the beam in the zero position whilst the scale pans and cylinders still hang on the beam. This device is made use of when changing the weights, and on reversal of current in making measurements.

For observing the rest-point of the balance a microscope, seen at M_2, fig. 6, is used to view a finely divided ivory scale carried by the pointer at a distance of $14\frac{5}{8}$ inches (37·2 centims.) from the knife edge. The magnifying power of the microscope is about 48, and the scale is $\frac{3}{4}$ of an inch long, divided into 200 parts; each division is therefore $\frac{3}{800}''$ (0·095 millim.). The cross wires and the lines on the scale are sufficiently fine to permit of one-twentieth of a division to be estimated quite easily, and with care and practice it is possible to read to fiftieths of a division, and in some cases to hundredths.* In all observations the method of vibrations was employed in determining the rest-point, the amplitude being limited to a few divisions on either side of the middle.

---

* For illuminating the scale, a lens and a Nernst lamp placed some 6 feet away were used, and proved most satisfactory.

To allow of free access to the balance there are two sliding sashes, S′, S′, fig. 6, both at the front and back of the case, and the ends have hinged doors, D, opening outwards. The middle portion of the case carrying the microscope and the corresponding piece at the back can also be removed. It is thus possible to make any adjustment required with comparative ease. Fig. 2, Plate 7, shows a view of the balance with sides of the case taken away.

Although it is not essential that the arms of the balance should be of equal length in a current weigher used in the manner described on p. 526, it was thought desirable to determine the ratio of their lengths. Employing weights of 50 grammes, it was found that

$$\text{length of left arm} \div \text{length of right arm} = 1{\cdot}00001_1,$$

so a very close approximation to equality exists.

SECTION 5.—MAGNETIC TESTS.

As it is of considerable importance that the permeability of all parts of the current weigher be practically unity, magnetic tests were made on the materials employed.

Before the phosphor-bronze support for the balance was cast, Sir ANDREW NOBLE forwarded to the Central Technical College in September, 1899, a bar of the alloy it was intended to use, and careful experiments were made on the material. Tested by a very sensitive magnetometer the bar showed no magnetic property. An induction balance having two primary coils in series, and two secondaries in series opposing, with a sensitive moving-coil galvanometer in the same circuit, was therefore set up. One ot the induction coils was in the form of a solenoid 2·4 centims. diameter and 36 centims. long, wound with 457 turns of No. 18 S.W.G. wire as primary and 1600 turns of No. 34 S.W.G. as secondary. The other half of the balance was formed of two separate coils whose relative position could be varied continuously until their mutual induction exactly balanced that of the solenoid windings when the core was of air. By shunting a known fraction ($\frac{1}{1000}$) of the current from the primary of the second pair the swing obtained on the scale of the galvanometer gave a measure of the sensitiveness of the arrangement; this was sufficient to show a change of 1 part in 30,000.

On removing the above-mentioned shunt and inserting the phosphor-bronze rod (2 centims. diameter and 30 centims. long) into the solenoid, a quick jerk of the galvanometer spot was observed on starting and stopping the primary current, and a rapid return to zero. The direction of the kick was such as would be produced by a permeability less than unity; the effect, however, was traced to be mainly due to eddy currents in the rod, and was nearly neutralized by putting a tertiary coil, with a resistance box in series with it, in proximity to the second pair of coils. The resistance in the tertiary circuit could be so adjusted that the movement of the spot on starting or stopping the current was barely perceptible when the bronze rod was inside the solenoid, and on removing the rod and opening the tertiary circuit, without making any other change whatever, the balance was to all appearances perfect. We were therefore certain that the permeability of the alloy differed very little, if at all, from unity, so the casting of the stand was proceeded with.

Similar tests were made on the completed stand when received at the Central Technical College in 1900. The shape and size of the stand, however, made it difficult to place within coils of manageable dimensions, so a modified method of testing was used. The College possessed a standard of mutual induction (called S in this section), of 0·01 henry, made in 1892, consisting of coils wound in grooves on a wooden disc $9\frac{1}{4}$ inches diameter and $2\frac{3}{4}$ inches thick, so it was decided to test the stand by observing whether the mutual induction of these coils was altered by placing them on the circular top-plates of the slide rests which were to support the coils. To do this, an induction balance formed of the mutual induction standard S and another pair of coils was arranged as described above. The system was carefully balanced when S was supported on one end of a pine* board, 1 inch by 11 inches by 12 feet long, the other end of which rested on one of the top-plates. On moving S to the middle of the board the balance was not disturbed, but on placing it over the stand a quick jerk of 85 divisions and rapid return to zero was noticed. This kick, the effect of eddy currents in the metal of the support, was neutralised as far as possible by a tertiary circuit. It could not, however, be entirely eliminated by the tertiary coils available, a phenomenon attributed to want of equality in the time-constants of the tertiary circuit and of the eddy-current circuits in the continuous metal. The procedure adopted was to observe the swing produced by shunting $\frac{1}{1000}$ of the current from the primary of the balancing pair of coils, when the test pair were supported above air, and on the top-plate of the stand respectively, the tertiary circuit being open in the former case and closed in the latter. In each of the two positions the swing produced was 33 divisions. The sensitiveness of the arrangement was thus 1 in 33,000 per division, and under these conditions no difference would be detected. Four sets of tests were made giving precisely equal swings.

The experiments were repeated on the top-plate of the second slide rest of the stand with the same result. The eddy-current effect was somewhat different in the two cases, for in one the resistance in the tertiary circuit necessary to give minimum kick was 134 ohms and in the other 124 ohms.

To test whether the two ends of the pine board differed magnetically, it was turned end for end, and the whole cycle of operations repeated. No difference could be detected. In all cases great care was taken to twist the leads together in pairs, so as to avoid mutual induction in parts of the circuit other than that under test. The test coils S and the balancing coils were kept far apart and with their planes at right

---

* Pine was used because previous work in connection with very sensitive moving-coil galvanometers had shown this material to be non-magnetic.

angles, so that there was no mutual induction between the members of one pair and those of the other pair.

After the complete ampere balance was set up at the National Physical Laboratory, further magnetic tests were made on the stand and surrounding parts by sending a current of 1 ampere (approximately) round one of the suspended coils only, and observing whether the rest-point of the balance was affected thereby. The same test was made with the current reversed, and the whole repeated on the other suspended coil. In neither case could any change in the rest-point be detected. Experiments were also made by bringing masses of iron in proximity to the balance when the suspended coils were carrying their normal current. The effects of these masses were much smaller than expected; in fact, the iron had to be placed very near a current-carrying coil to produce any observable change on the rest-point. It may, therefore, be concluded that there can be no appreciable error in the balance due to magnetism or diamagnetism of the phosphor-bronze support.

Magnetic tests on marble were made at the Central Technical College in 1897, using the large marble cylinder employed in the Lorenz apparatus constructed by Messrs. NALDER BROS. & Co. for the McGill University, Montreal.* Its permeability differed from that of air by an amount too small to be detected.† This fact, together with the high specific resistance of marble, decided the material to be used for the cylinders of the proposed current weigher.

All the marble used in the fixed and suspended cylinders of the ampere balance was tested at the National Physical Laboratory, when received from the merchants, by observing the swing (if any) of a galvanometer in the secondary circuit of a pair of coils when the marble was quickly inserted as a core, the current in the primary circuit being kept quite constant. The primary coil had 1000 turns of No. 32 S.W.G. copper wire, and the secondary 10,000 turns of No. 42 S.W.G. With a current of 0·5 ampere in the primary the arrangement was extremely sensitive, as a change in the primary current of 1 part in 10,000 produced a swing of 5·4 millims. The scale could be read to 0·2 millim., so that a change of flux of 1 part in 270,000 could be detected. The tests showed that the permeability of the marble did not differ from that of air by 1 part in 100,000, a result which is in agreement with the American measurements mentioned above.

By means of the same coils the susceptibility of solid ferrous sulphate was measured as 73×10^{-6}, crystallised salt being used, and the air space determined by the aid of alcohol. KÖNIGSBERGER‡ gives 37×10^{-6} as the susceptibility of powdered ferrous sulphate.

---

* 'B.A. Report,' 1897, p. 218.

† More recently tests made in America by WILLS, GUTHE, and STEBBINS, show the magnetic susceptibility of several kinds of marble to be extremely small, probably less than 1×10^{-6}. See 'Bulletin of Bureau of Standards,' vol. 2, pp. 52, 89.

‡ 'WIED. Ann.,' 66, 698, 1898.

The castings, drawn tubes, screws, &c., intended for making the beams, pillars, and other parts of the physical balance, were forwarded by Mr. OERTLING to the National Physical Laboratory for magnetic test to determine their suitability, or otherwise, for the purpose. With the exception of the castings, all the first samples showed distinct paramagnetic properties, and were rejected, as also were several specimens submitted subsequently. It was found necessary to obtain the tubes and rods from special sources before satisfactory ones were secured. Many samples of brass screws were purchased and tested, but none were sufficiently free from magnetism, so Mr. OERTLING was obliged to cut all used in the instrument in his own shops. The locks and keys for the balance case had also to be specially made, phosphor bronze being the chief material used. No trouble was experienced with the paraffin wax used to coat the windings.

In the magnetic tests on the metallic parts of the physical balance the eddy-current effects were small. When a brass rod was quickly inserted as a core to the primary, a swing of 4 millims. resulted, the direction being the reverse of that corresponding to increased permeability. To overcome this effect a thick brass rod was cut in two and the metallic substance placed between and in contact with the two portions, the whole being connected together by means of a metal tube so as to realise as nearly as possible a continuous metallic conductor. The brass rod was so long that when introduced into the primary it projected about 40 centims. from the far end when the metal under test was about to enter the coil. An axial motion of the metallic rod did not give rise to eddy currents capable of producing a swing of 0·2 millim.

Further tests on the suspended system were made after the erection of the balance by sending a current through one of the fixed coils when lowered so that the corresponding suspended cylinder was without it. The rest-point of the balance was unaffected thereby, and remained unchanged when the current was reversed. Similar observations were made when the current was sent through the other fixed coil, but no change was detected.

SECTION 6.—CONSTRUCTION, MEASUREMENT, AND INSULATION OF COILS.

Preliminary tests at the Central Technical College and subsequent ones at the National Physical Laboratory led to the choice of "First Statuary" Carrara marble for the material of the cylinders. The tests showed this to be an excellent electrical insulator and of negligible magnetic susceptibility. The preliminary insulation tests were made on a small cylinder 4 inches in diameter and 2 inches in axial length. A double screw thread (36 turns to the inch) was cut on this, and helices of No. 24 bare copper wire wound thereon. The insulation resistance between adjacent strands was low at first, but rose to 4000 megohms when the cylinder was immersed in hot liquid paraffin wax, removed, and allowed to cool. The magnetic tests have already been described.

The cylinders were prepared in the rough by Messrs. GOODY and CRIPPS, the large ones being 13 inches in diameter, 11 inches in axial length, and 2 inches thick. The corresponding dimensions of the small cylinders are 8, 6, and 0·5 inches. A few veins run through the large cylinders, but the dark material, of which these consist, is of negligible magnetic susceptibility. An appreciable quantity of the substance was collected from a number of rough pieces of marble sent by the marble merchants, and this was subjected to the magnetic tests already dealt with; there was no indication that the permeability differed from unity.

The cylinders are of an inconvenient shape and size for a direct determination of their coefficient of expansion; moreover, it was inadvisable to immerse them in water, and this latter operation was desirable if satisfactory observations were to be made. A bar of marble, 45 × 5 × 2·3 centims., was therefore procured from the same source; this was baked in an oven at 140° C. and soaked in hot paraffin wax previous to any linear observations being made. The mean coefficient of expansion between 1° C. and 25° C. was determined by Mr. ATTWELL to be 24×10^{-7} per 1° C.

The marble cylinders were examined for flaws and freedom from cavities; they were then turned until their dimensions were approximately correct, and afterwards baked in an oven at a temperature of 140° C. for 30 hours. On the completion of the baking, and whilst in a hot condition, they were immersed in hot paraffin wax at 110° C. No bubbles of gas were evolved from either of the four cylinders used in the ampere balance, but from one part of another cylinder, which was rejected for reasons mentioned hereafter, a tiny stream of bubbles escaped for a minute or two after immersion in the wax. Each cylinder remained immersed for at least 36 hours; on removal it was again examined for flaws, but none were detected. Previous to the turning of the marble cylinders, a long steel rod was turned on the lathe set apart for this work, and its ellipticity and conicality were determined by measurement. The ellipticity was very small and the lathe was adjusted until the conicality was too small to be measured with certainty; notwithstanding, the marble cylinders turned subsequently are distinctly conical, and, in the case of the large cylinders, those ends are the larger which were nearer to the face plate when the spiral grooves were cut. We conclude, therefore, that the weight of a cylinder produced a tilt, and that better results might have been obtained by turning between dead centres. The two small cylinders were turned in this way.

A cylinder was secured to the face plate of the lathe by four external dogs, the space between the face plate and the end of the cylinder nearest to it being about 1½ inches. This mode of support enabled the two ends to be turned truly parallel, and the interior surface to be turned normal to them. To turn the outer surface, four large metal studs were turned in position on the face plate, and one end of the cylinder fitted over them; this end was pressed into contact with the face plate by two long bolts passing through the cylinder to a rectangular bar of steel pressed against the other plane end; the outer surface was then turned. The inner and outer surfaces were thus practically concentric, and the ends at right angles to the axis. The turning was necessarily slow, more than five weeks being occupied on each of the large cylinders; the winding of the coils was, however, completed in a few hours. Alternate cuttings were made of the spirals, of which the grooves were V-shaped, with an angle of 85°, and of $\frac{1}{18}$ inch pitch. It was very important that each groove should be midway between its neighbours, and the lathe was operated to effect this; subsequent microscopic examination proved the equality of distance. While in the lathe, the diametral uniformity of the grooves was tested by winding in different parts of the cylinder a couple of turns of No. 24 copper wire, and estimating the difference in the diameters of the various turns by the touch of callipers. The cutting tool used was hardened in mercury and was not tempered.

On each large cylinder there are two pairs of coils, the central portion being left unwound for an axial distance of $\frac{2}{18}$ of an inch. The leads of all the coils must lie in a plane containing the axis of the cylinder, or otherwise the current through them will exert a force on the current in the suspended coils of the balance. To ensure the absence of such a force, the following scheme was adopted for the winding of each coil (see fig. 8, p. 473). From the outside of the cylinder and near one end, two radial cylindrical holes, *a* and *b*, were drilled; these are $\frac{5}{64}$ inch in diameter, $\frac{5}{32}$ inch from centre to centre, and $1\frac{1}{2}$ inches in depth; they lie in a plane containing the axis of the coil. From the inside surface two other $\frac{5}{64}$-inch holes, *c* and *d*, were drilled to a depth of $1\frac{1}{2}$ inches in the same axial plane as the others; one of these, *d*, is near the centre of the cylinder, and the other, *c*, is $\frac{5}{32}$ inch from *b*, the innermost of the previous ones. The holes *a* and *b* have slotted brass nipples, shown in section, screwed into them, and *c* and *d* are bushed on the inside of the cylinder with ivory pieces. After these bush pieces were screwed into position, the fine radial holes passing through the nipples, the ivory, and the marble, were drilled; the diameter of these holes is 0·024 inch, and they admit of the free motion of a straight piece of No. 24 wire. The radial holes were drilled in the following manner:—A bar of steel, 2 inches square and 30 inches long, with two opposite planed surfaces, was bolted to the slide rest so that it projected towards and was perpendicular to the axis of the lathe; a $\frac{1}{4}$-inch hole was then drilled through the far end of it. Into this hole a spindle was fitted, and on the spindle a small pulley was fixed, so that the whole could be driven by a motor. The bar was then turned into an axial position, the spindle set parallel to the face plate, and the radial holes drilled by a fine drill fitted in the spindle head; the feed was governed by the pressure of the hand. A check on the accuracy with which the holes were drilled was obtained in the following manner:—Adjacent helices are supposed to start in the same diametral plane and at an angular distance of 180° apart; the prolongations of the holes *a*, *b*, *c*, *d* should therefore be in line with those drilled for the leads of the adjacent coil. To test this, a straight piece of No. 24 wire was passed through corresponding holes, and pulled taut; there was no undue friction, and a centre finder indicated that the wire cut the axis of the cylinder. As each coil consists of a whole number of turns, there was no necessity to rotate the cylinder from the time the drilling of the first radial hole was commenced to the completion of the last.

An estimate was made of the accuracy with which the number of turns is known. On the fixed cyclinders there are 90 turns to each coil and the diameter is about 33·0 centims. From observations on the radial holes, the number of turns is considered to be correct within 2 parts in 1,000,000.

Between the inner orifices of the passages *b* and *c*, fig. 8, a short **V**-groove *e*, $\frac{1}{8}$ inch deep, was cut, and between the corresponding apertures of *a* and *d* a groove *f f*, $\frac{1}{16}$ inch deep, was made; in these grooves portions of the leads of the coils were laid.

The copper wire with which the four coils were wound was supplied by the London Electric Wire Company, Limited, on bobbins of the same diameter as the cylinders. It is hard-drawn bare No. 24 S.W.G., and has a conductivity such that 1 metre weighing 1 gramme has a resistance of 0·149 ohm at 15°·5 C. The mean diameter of the wire is 0·559 millim.; this is the average of several hundreds of measurements, the maximum variation being 1 per cent.

As a guide in winding, an arm was fixed to the saddle and tool carriage of the lathe which supported the bobbin and a small grooved brass pulley over which the wire passed on its way to the cylinder. At the commencement the pulley was set in position for a straight feed and the tool carriage was placed in gear with the leading screw. On the axle carrying the bobbin a grooved pulley was fixed, and around this a rope passed; one end of the rope was attached to a spring balance fixed to the lathe saddle, and the other end was tied to a heavy weight which just swung clear of the floor. The effective load on the wire during the winding of the coils was 10 lbs., which resulted in an extension of 0·16 per cent., the limit of elasticity not being exceeded. YOUNG's modulus for the material of the wire was experimentally determined as $1{\cdot}1_6 \times 10^{12}$ (C.G.S. units). The coefficient of linear expansion of copper is $1{\cdot}7 \times 10^{-5}$; hence for an increase in temperature of 80° C. the expansion is 0·14 per cent. When the coils were immersed in paraffin wax the temperature of the copper was very nearly 100° C., but the wire appeared to be quite taut on the cylinders. The reason for this is apparent.

In the case of the fixed cylinders the winding was commenced by threading a free end of the wire from the outside through the hole *c* and back through *b*, fig. 8. When a few centimetres had been pulled through the nipple, it was passed through the slit therein and pressed back towards the surface of the marble; it was then given a couple of turns about the nipple and soldered to it. The wire was afterwards pulled taut and the necessary bends made to commence the winding. The position of these bends was estimated beforehand and the wire in the vicinity softened over the flame of a spirit lamp. During the winding the cylinder was rotated very slowly and stopped after each revolution for a couple of measurements to be made of the diameter of the wire. On its way from the bobbin to the marble the wire passed between two pads of silk moistened with alcohol and afterwards between two pads of dry silk. From time to time the strands were examined with a lens, but nothing unsatisfactory was observed. When the winding was complete except for about 10 centims. of the last turn, the lathe was stopped, and a long **U**-shaped clamp slipped over that end of the cylinder farthest from the face plate; a grooved piece of ebonite was placed over the last strand and the latter clamped between the ebonite and the marble; this enabled the tension on the wire of the bobbin to be relaxed. A length of wire sufficient to complete the connections was then measured off, the free end passed through the radial hole *d*, fig. 8, along the **V**-groove *ff*, through *a*, and finally secured to the nipple by soldering. Throughout these operations the wire was kept as taut as possible. On the completion of the helix the clamp was removed, the **V**-grooves filled in with paraffin wax, and the cylinder wrapped round with silk. It was then removed for diametral and axial measurements.

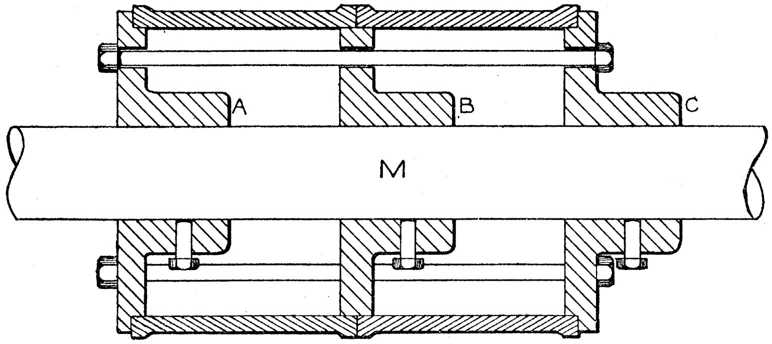

Fig. 9. Method of supporting the suspended cylinders during turning.

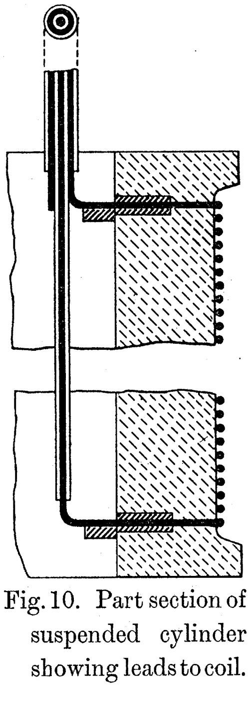

Fig. 10. Part section of suspended cylinder showing leads to coil.

The turning of two small cylinders for the suspended coils was completed in a manner very similar to that described for the large cylinders, but as the ellipticity of these was comparatively great, they were rejected. Two other cylinders were chosen and their inner and end surfaces turned as in the previous cases, but their outer surfaces were turned between dead centres. The arrangement is shown in fig. 9. A, B, and C are tight-fitting collars on the mandril M; the outer collars have shoulders, and these and the collar B are turned so as to be a good fit in the cylinders, which are clamped between A and C by means of three bolts. The outer surfaces of the cylinders were finished in this way, and afterwards the double spiral grooves were cut; the result is very satisfactory.

The connections to the suspended coils (fig. 10) are much simpler than those for the fixed coils. The terminating nipples are placed inside the cylinder and one-half of each is cut away where it projects from the marble; the portions which project are thus half-cylinders: they have axial grooves into which the leads are soldered.

After winding the coils the traces of fourteen axial planes at equal angular distances apart were marked on the end faces of each fixed and of each suspended cylinder and on the ungrooved portions of the outer cylindrical surfaces. A number of holes for the fixing of spirit levels and sighting pieces were also drilled.

TABLE I.—Observations for Axial Length of Coils on Suspended Cylinder No. 1.
Temperature = 15°·5 C.

Number of turns. N.	Axial length of N turns.	Mean of values in Column 2.	Calculated axial length of 184 turns.
	centims.	centims.	centims.
184	12·9838	$12\cdot9833_3$	$12\cdot9833_3$
	29		
	27		
	36		
	41		
	29		
	39		
	27		
163	11·5013	$11\cdot5008_3$	$12\cdot9825_3$
	10		
	02		
	08		
149	10·5137	$10\cdot5134_0$	$12\cdot9829_9$
	29		
	39		
	31		
135	9·5260	$9\cdot5254_5$	$12\cdot9828_3$
	58		
	49		
	51		
121	8·5374	$8\cdot5376_0$	$12\cdot9828_0$
	80		
	66		
	84		
		Mean =	$12\cdot9829_0$

The turning of the marble cylinders was very ably done by Mr. TAYLERSON, of the Engineering Department of the National Physical Laboratory.

Axial Length of the Coils.—The axial length of each helix was computed from a large number of measurements; some of these were made on the complete helix and others on portions of it. In addition, the mean value was checked by observations on a steel cylinder, on which a fine spiral groove was cut of the same pitch as the coil.

The steel and marble cylinders were turned at or about the same temperature, and the same portion of the leading screw of the lathe was used. For the axial measurements of the coils a cathetometer was employed, but the observations are subject to a greater probable error than the generality of high-precision cathetometer measurements owing to the boundaries of the wires being somewhat ill-defined. The axial length of the helices traced on the steel cylinder was determined by a simple comparator, and the value thus obtained is associated with a very small probable error. Table I. contains the results of the measurements on the coils of suspended cylinder No. 1. The first set of measurements was made on the whole number of turns, viz., 184; the next observations on 163 turns chosen in various parts of the coil, and the third, fourth, and fifth measurements were on 149, 135, and 121 turns similarly chosen. Each of the values recorded in column 2 is the mean of at least four readings; in all, about 100 observations were made.

If equal weights are given to each set of observations, the mean of the values recorded in the last column is 12·9829 centims. The observations on the outer end wires are not quite so reliable as those on intermediate ones, for a little irregularity is always possible when starting and finishing a winding; eight observations (each being the mean of four) are therefore included in the first set. The mean of eight measurements on the steel cylinder is 12·9830 centims., a much closer agreement than was anticipated. Taking the value 12·9829 centims. and the values recorded in Column 4 of Table I., the differences (observed − mean) are $+4$, -4, $+1$, -1, and -1μ,* from which a probable error of 0·001 per cent. is deduced if we exclude the error of the gauges employed. The observations on the helices of the other three cylinders are equally satisfactory, and the means of the readings obtained with them are given in Table II.

As the tool carriage travelled over different portions of the leading screw of the lathe when cutting the spiral grooves in the suspended cylinders 1 and 2, the uniformity of the screw was tested and an estimate of 2μ was made as the probable difference in length of the coils on the two cylinders, that of the coils on No. 1 being the greater. The recorded measurements show that No. 2 is probably the longer by this amount, the values being 12·9829 centims. for No. 1 and 12·9831 centims. for No. 2. On the whole, the observation error of the axial lengths may be taken as of the order $1\frac{1}{2}$ parts in 100,000.

For the diametral measurements a machine, shown in fig. 11, was obtained from Messrs. STANLEY. This consists of a double-webbed rectangular steel girder, two micrometer heads, and various supports for gauges, &c. To each of the micrometer heads an optical lever of the form shown in fig. 12 was attached. A well-fitting hardened steel piston P is tapered and ground at one end so as to form a plane edge $\frac{1}{4}$ inch wide and $\frac{1}{40}$ inch deep; the other end tapers more slowly and terminates in a rounded end $\frac{1}{20}$ inch in diameter. This end of the piston fits into a rectangular

---

* $\mu = 1$ micron, or $\frac{1}{1000}$ of a millimetre.

TABLE II.—Observations for Axial Length of Coils. Temperature 15°·5 C.

Cylinder under observation.	N = Number of strands observed.	Axial length of N strands.	Total number of observations.	Total turns.	Calculated axial length of coil.	Difference from mean.
		centims.			centims.	
Suspended cylinder No. 2	184	$12\cdot9834_0$	32	184	$12\cdot9834_0$	$+3\mu$
	163	$11\cdot5014_2$	12		32_0	$+1$
	149	$10\cdot5133_8$	12		29_7	-2
	135	$9\cdot5253_0$	12		26_3	-5
	121	$8\cdot5380_0$	12		34_0	$+3$
					Mean = $12\cdot9831_2$	
Steel cylinder . . .	—	—	8	—	12·9828	
Fixed cylinder No. 1, upper portion	163	$11\cdot5018_3$	16	180	$12\cdot7014_1$	$+3\mu$
	149	$10\cdot5136_0$	16		09_9	-1
	135	$9\cdot5258_4$	16		11_2	0
	180	$12\cdot7007_0$	8		07_0*	-4
					Mean = $12\cdot7011_1$	
Steel cylinder . . .	—	—	8	—	12·7008	
Fixed cylinder No. 1, lower portion	163	$11\cdot5022_6$	16	180	$12\cdot7018_8$	$+5\mu$
	149	$10\cdot5138_0$	16		12_3	-2
	135	$9\cdot5260_6$	16		14_1	0
	180	$12\cdot7007_0$	8		07_0*	-7
					Mean = $12\cdot7013_9$	
Steel cylinder . . .	—	—	8	—	12·7008	
Fixed cylinder No. 2, upper portion	163	$11\cdot5016_0$	16	180	$12\cdot7011_5$	$+1\mu$
	149	$10\cdot5135_6$	16		09_5	-1
	135	$9\cdot5255_8$	16		07_7	-3
	180	$12\cdot7014_0$	8		14*	$+4$
					Mean = $12\cdot7010_2$	
Steel cylinder . . .	—	—	8	—	12·7008	
Fixed cylinder No. 2, lower portion	163	$11\cdot5016_5$	16	180	$12\cdot7012_1$	-1μ
	149	$10\cdot5140_5$	16		15_4	$+3$
	135	$9\cdot5258_0$	16		10_7	-2
	180	$12\cdot7014_0$	8		14*	$+1$
					Mean = $12\cdot7012_9$	
Steel cylinder . . .	—	—	8	—	12·7008	

* These values were determined by measuring the complete axial length of the upper and lower coils plus the central gap.

Observations on 163, 149 and 135 strands indicate practical equality of the axial lengths of the upper and lower helices and also enable the length of the central gap to be calculated. This latter length was subtracted from the total and the result divided by two. In taking a mean of the values given in Column 6, only half the weight has been attached to the "*" observations.

groove cut in a brass bar carrying a plane mirror M; the bar is free to rotate about a steel axle, its movement being in a vertical plane. A comparatively strong brass spring on each side of the bar causes it to continually press against the piston if the rounded end of the latter projects beyond the stop S. The vertical distance between the axis of the mirror and the contact point of piston and brass bar is about 1·5 millims., and the height of the micrometer head above the upper surface of the girder is 30 centims. When the barrel B of the micrometer advances, the piston, mirror, bearings, &c., advance with it until the plane end of the piston comes in contact with a rigid body; an advance of the micrometer barrel then results in a tilt of the mirror nd the consequent deflection of a spot of light. All the parts are well made and the bearings lubricated with clock oil. A Nernst filament was used as a source of light, and a lens produced a sharp linear image on a white surface 150 centims. distant from the mirror. A forward motion of the micrometer barrel of 1μ resulted in a deflection

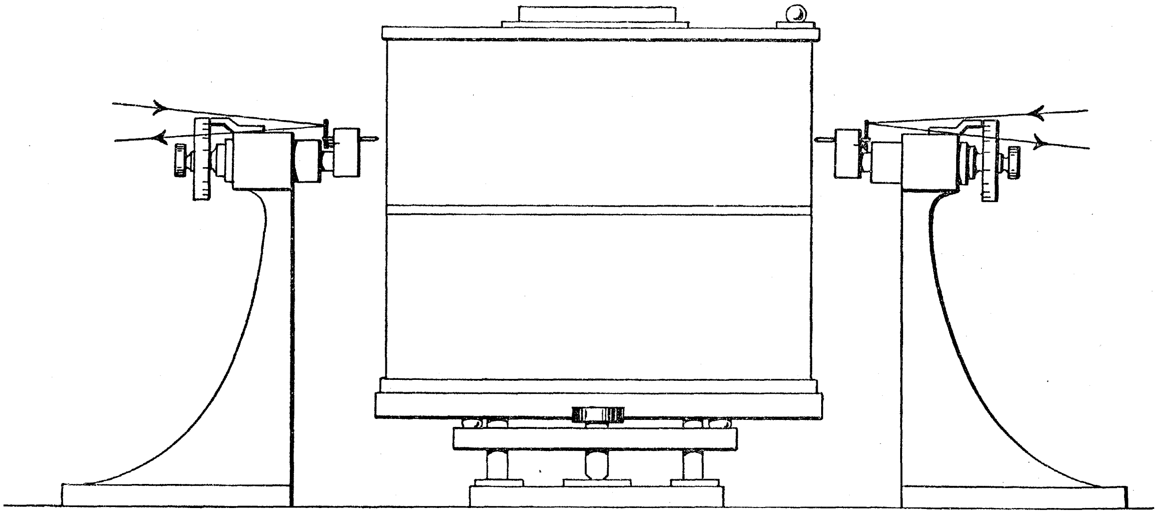

Fig. 11. Machine for measuring diameters of cylinders.

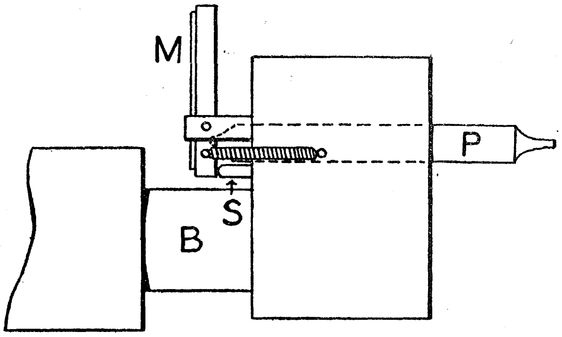

Fig. 12. Optical lever for measuring diameters of cylinders.

of 2 millims. on the scale; a difference of 1μ was thus read with ease. As there was no silk on the wire to interfere with precise measurement, this high sensitiveness was well worth attaining. The contact planes of the pistons were tested for parallelism with satisfactory results; tests were also made which indicated that these planes were normal to the axes of the pistons.

To facilitate the diametral measurements, the marble cylinder under observation was supported on a turn-table provided with ball bearings and levelling screws (fig. 11). The original intention was to support this table on a separate platform and so avoid the bending of the girder which results when it supports the load; this, however, proved to be unsatisfactory, and ultimately a small wooden platform was bolted to the girder, and on this the turn-table and cylinder rested. The traces of the axial planes on the ends and ungrooved portions of the cylinder, and the knowledge that the ends were at right angles to the axis, enabled the coils to be rapidly set in position so that their axes were vertical; at the same time the adjustment ensured that the plane edges of the touch-pieces would come into contact with the copper wires at opposite ends of a diameter. Two spirit levels at right angles were used for the levelling of a cylinder, and it was usually found necessary to make a slight adjustment for every measurement made in a different axial plane. In general, observations were made in eight approximately equidistant diametral planes, and in each of these, 14 measurements were taken in equidistant axial planes; at the conclusion of the 14 observations the first was repeated as a check on the constancy of the apparatus. The method used was not a "null" one; the zero reading, *i.e.*, that when a mirror was against a stop, was observed from time to time, and a constant deflection of 10 millims. from this was adhered to throughout the measurements. The apparatus worked very smoothly, the readings being easily reproduced to 1μ, and only in a few cases of uncertainty was more than one observation made of any one diameter. The temperature of the room was very nearly constant and equal to $15^\circ\cdot5$ C.; a Richard's thermograph recorded the variations.

At the commencement of a series of measurements, the Whitworth steel gauge (square section, flat ends) was placed in position, and the uprights carrying the micrometer heads were bolted to the girder. A mass equal to that of the turn-table and cylinder was next placed on the small platform between the micrometer heads, and the observations on the gauge were then made, the latter being displaced and reset between every two measurements. The cylinder was then placed in position and measured, and afterwards the gauge was again set up. With respect to the latter measurements, the difference in the readings of the micrometer heads never varied by more than 2μ from the commencement to the completion of a series of observations. When measuring a diameter, the touch-pieces made contact with one wire of each helix and the mean of the observations gave, therefore, the mean outside diameter of the two coils. To determine the difference of the mean diameters of the coils, one of the micrometer heads was raised $\frac{1}{36}$ inch and a few observations of difference made; the value of this difference varies from 2μ to 3μ for the different pairs of coils. A confirmation of this difference appears on p. 516.

In Tables III. to VI. there are given the diametral measurements of the coils in various planes, the mean diameter of the wire with which the coils are wound, and the mean diameter of the coils to the central filament of the wire. In the conversion of inches to centimetres the ratio 2·539998 has been taken. For the data relating to the steel gauges employed we are indebted to Mr. ATTWELL, of the Metrological Department. A good conception of the ellipticity and conicality of the coils is afforded by the calibration curves which follow (figs. 13, 14, 15, 16). The suspended coils are very slightly elliptical, and the conicality is also very small and uniform. The difference in the extreme mean diameters of suspended cylinder No. 1 is 17μ, equivalent to an average slope of 1 in 8000; the corresponding value for

TABLE III.—Results of Measurements of the Diameters of the Coils, to Centres of Wires, on Suspended Cylinder No. 1. Temperature, 15°·5 C.

Diametral plane number.	Containing strand number—								
	4	38	68	80	92	104	116	146	180
	= 20·3500 centims. +								
1	79μ	79μ	80μ	80μ	81μ	83μ	84μ	91μ	94μ
2	77	78	84	82	81	83	84	94	94
3	75	77	80	83	83	83	86	92	96
4	76	74	80	79	82	84	85	90	93
5	75	77	79	79	78	81	85	91	96
6	74	77	79	82	82	83	86	89	93
7	76	78	79	79	81	83	86	86	91
8	77	78	81	80	82	82	87	89	90
9	76	80	82	82	82	84	86	87	89
10	80	80	82	82	81	86	88	84	92
11	80	77	82	82	83	86	84	86	90
12	78	82	83	84	84	85	86	88	92
13	80	82	83	82	84	87	86	90	90
14	78	80	83	80	83	83	86	90	91
Mean . .	77_2	78_5	81_2	81_1	81_9	83_8	85_6	89_1	92_2

Number of observations made to determine the mean diameter of the wire, 46.
Greatest difference between any two observations, 0·8 per cent.
Mean diameter of wire, 0·559 millim.
Approximate mean diameter of coils = mean of the values in table = $20{\cdot}3583_4$ centims.
Mean diameter of coils, computed from calibration curve = $20{\cdot}3583_5$ centims.
Difference of diameters of neighbouring convolutions = 0·0003 centim. (approx.).

suspended cylinder No. 2 is about 1 in 10,000; the larger ends of these cylinders are the ends which were in contact during the turning. The ellipticity of the coils on the fixed cylinders is greater than that of the suspended coils, but it is much too small to influence the calculation of the mutual induction, for the variation of mutual induction with small changes in radius is approximately linear. For the same reason the conicality of the coils may be neglected. The larger end of each fixed cylinder is that which was secured to the face plate of the lathe during the final turning and screw cutting.

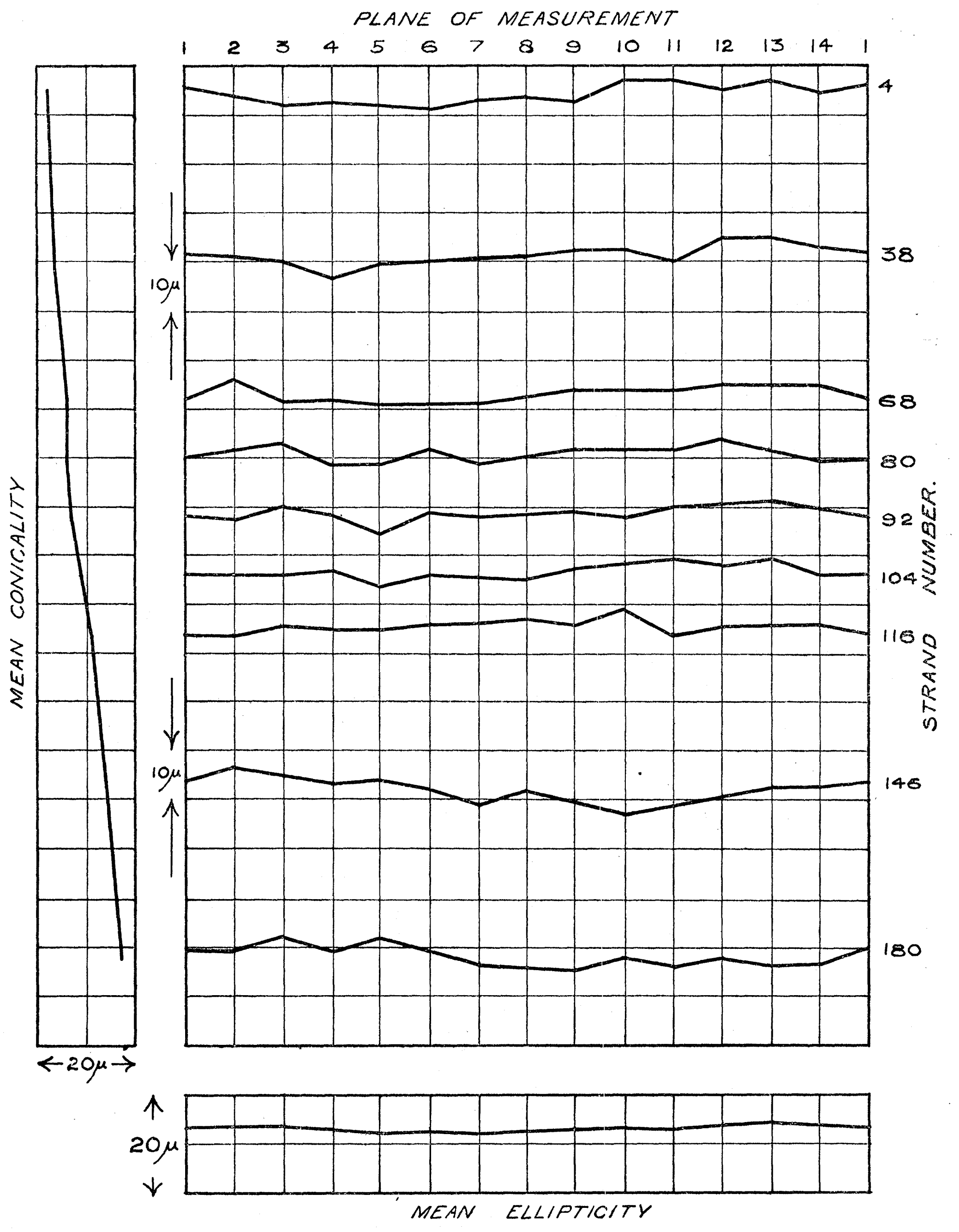

Fig. 13. Suspended cylinder No. 1.

TABLE IV.—Results of Measurements of the Diameters of the Coils, to Centres of Wires, on Suspended Cylinder No. 2. Temperature 15°·5 C.

Diametral plane number.	Containing strand number—									
	4	38	68	80	92	104	116	146	172	180
	= 20·3500 centims. +									
1	84μ	86μ	87μ	88μ	88μ	85μ	87μ	87μ	96μ	97μ
2	86	88	90	87	87	85	88	91	94	95
3	85	86	88	88	87	87	92	92	95	97
4	84	86	88	86	88	87	92	91	96	95
5	84	85	86	85	87	88	88	86	96	97
6	85	87	88	88	88	90	91	92	94	95
7	85	83	88	89	88	90	91	94	96	100
8	85	86	85	87	90	90	93	93	97	98
9	84	88	86	84	90	88	90	94	97	98
10	84	86	84	85	88	88	90	91	97	96
11	84	87	86	85	88	90	88	91	97	96
12	83	87	87	88	84	90	89	94	96	97
13	83	89	90	89	87	90	92	92	96	97
14	85	87	89	89	87	86	88	89	95	95
Mean . . .	84_4	86_5	87_3	87_0	87_6	88_1	89_9	91_2	95_9	96_6

Number of observations made to determine the mean diameter of the wire, 46.
Greatest difference between any two observations, 0·8 per cent.
Mean diameter of wire, 0·559 millims.
Approximate mean diameter of coils = $20·3589_5$ centims.
Mean diameter of coils, computed from calibration curve = $20·3589_0$ centims.
Difference of diameters of neighbouring convolutions = 0·0002 centim. (approx.).

The following convention is adopted in numbering the 14 axial planes. The upper plane end of a cylinder is viewed and one of the two marked diameters nearest in line with the connectors of the coils is called No. 1. The direction of ascending numbers is clockwise, diameters 1 and 14 being on opposite sides of the plane containing the leads.

An idea of the probable error of the mean diameter of any one coil may readily be obtained. The values of the standards of lengths employed are known in terms of the National Physical Laboratory 12-inch end gauge of similar type standardised by the Board of Trade. The absolute values are not of importance, however, for if the dimensions of the fixed and suspended systems change in the same proportion and in the same direction, the force due to the current is unchanged. For the smaller coils, an 8-inch steel gauge was used; for the larger ones, this was combined with a 5-inch gauge. The ratio of the lengths of these gauges was known with an error certainly less than 5 in 1,000,000. The probable error due to the setting of the gauges in the measuring machine bed was much greater than this, but an analysis of the readings leaves little doubt that the probable error is not more than 1μ. On each pair of coils not less than 112 observations were made, and the curves show that the error of a single observation must be small; hence the error of the mean diameter deduced from the 112 observations is not appreciably greater than the error of the gauge. We conclude, therefore, that the relative diametral dimensions of the coils are correct to 5 in 1,000,000. The probable error of the axial lengths given in Tables I. and II. is of the order 15 in 1,000,000, and the calculated value of the mutual induction should

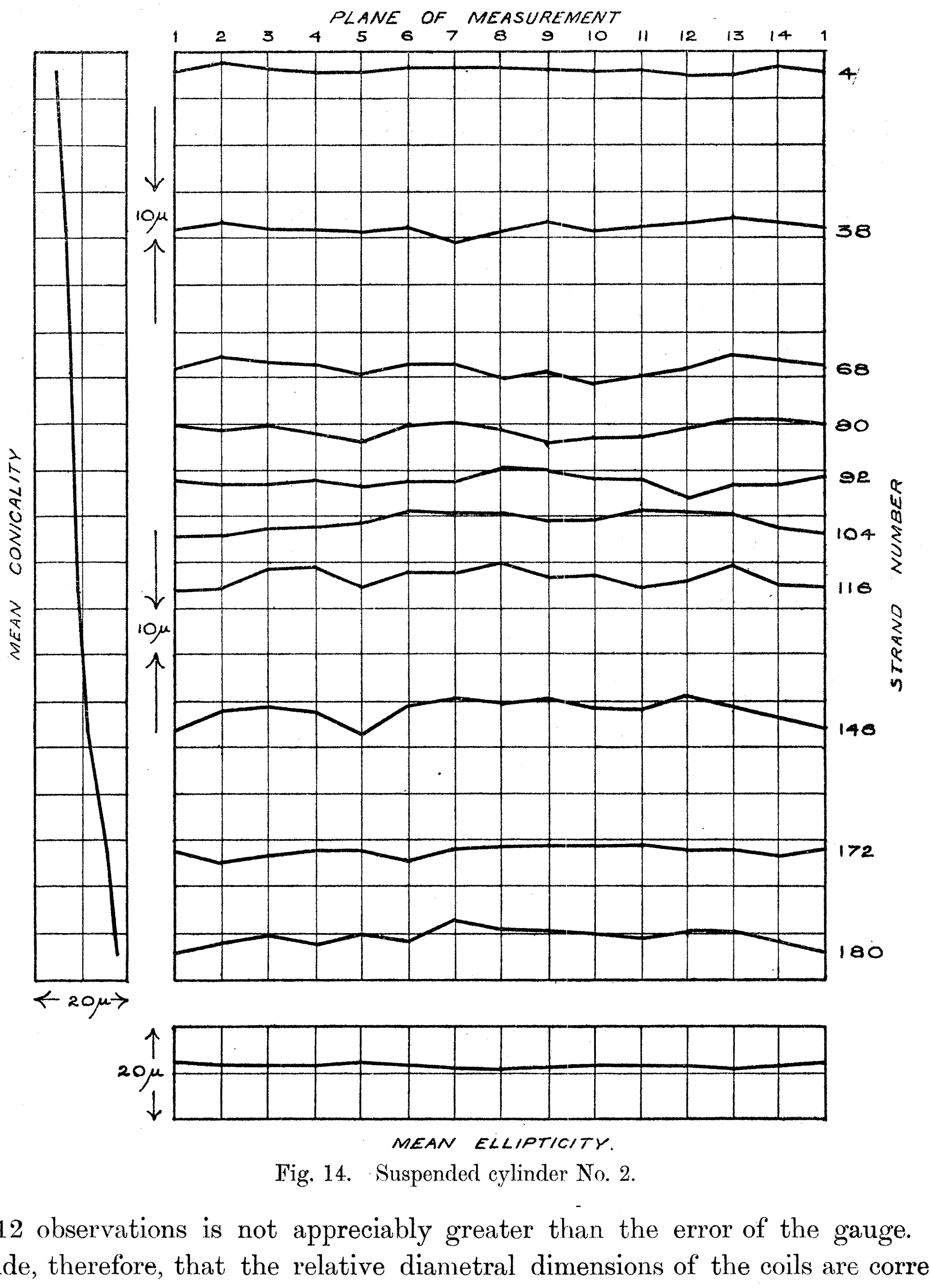

Fig. 14. Suspended cylinder No. 2.

TABLE V.—Results of Measurements of the Diameters of the Coils, to Centres of Wires, on Fixed Cylinder No. 1. Temperature 15°·5 C

Dia-metral plane number.	Upper coils. Number of strand (from upper end)—									Lower coils. Number of strand (from lower end)—								
	7	28	30	59	86	120	135	152	175	175	152	135	120	86	59	28	7
	= 33·0000 centims.									= 33·0000 centims.								
1	-15μ	-14μ	-12μ	-5μ	-1μ	$+9\mu$	$+7\mu$	$+8\mu$	$+10\mu$	$+8\mu$	$+8\mu$	$+9\mu$	$+13\mu$	$+11\mu$	$+8\mu$	$+8\mu$	$+12\mu$
2	−14	−11	−7	−2	+4	9	10	9	13	13	10	12	16	13	10	9	14
3	−6	−5	−2	+5	4	10	16	12	16	17	15	15	17	15	14	13	18
4	−4	+3	+3	+8	10	15	18	17	19	21	20	20	19	22	21	20	22
5	−1	+2	+5	+11	16	19	24	20	20	17	20	24	23	26	26	23	24
6	−1	+5	+7	+14	17	21	23	21	22	20	22	26	24	26	22	23	24
7	−7	−1	+5	+14	16	20	22	22	22	24	26	21	25	24	22	24	24
8	−13	+3	−1	+6	17	19	22	25	22	24	24	20	24	19	21	24	25
9	−15	−3	−2	+6	17	16	16	23	17	21	24	20	20	15	20	23	24
10	−15	−4	−4	+2	10	18	16	20	20	13	17	15	20	14	17	21	24
11	−13	−8	−7	−4	5	14	14	16	12	11	11	11	15	18	14	17	19
12	−14	−10	−10	−1	5	18	11	13	10	9	11	11	14	11	12	12	16
13	−14	−12	−10	−4	1	9	8	12	13	7	9	9	14	13	9	10	11
14	−13	−11	−10	−6	0	6	9	11	10	9	11	11	13	13	7	9	12
Mean. .	-10_4	-4_7	-3_2	$+3_1$	$+8_6$	$+14_5$	$+15_4$	$+16_4$	$+16_1$	$+15_3$	$+16_3$	$+16_0$	$+18_4$	$+17_1$	$+15_9$	$+16_9$	$+19_2$

Number of observations made to determine the mean diameter of the wire: 90 (upper), 90 (lower).

Greatest difference between any two observations: 0·7 per cent. (upper), 0·7 per cent. (lower).

Mean diameter of wire = 0·559 millim. (upper), 0·559 millim. (lower).

Approximate mean diameter of coils = $33\cdot0006_2$ centims. (upper), = $33\cdot0016_9$ centims. (lower).

Mean diameter of coils, computed from calibration curve, = $33\cdot0006_5$ centims. (upper), and = $33\cdot0017_0$ centims. (lower).

Difference of diameters of neighbouring convolutions = 0·0003 centim. (approx.).

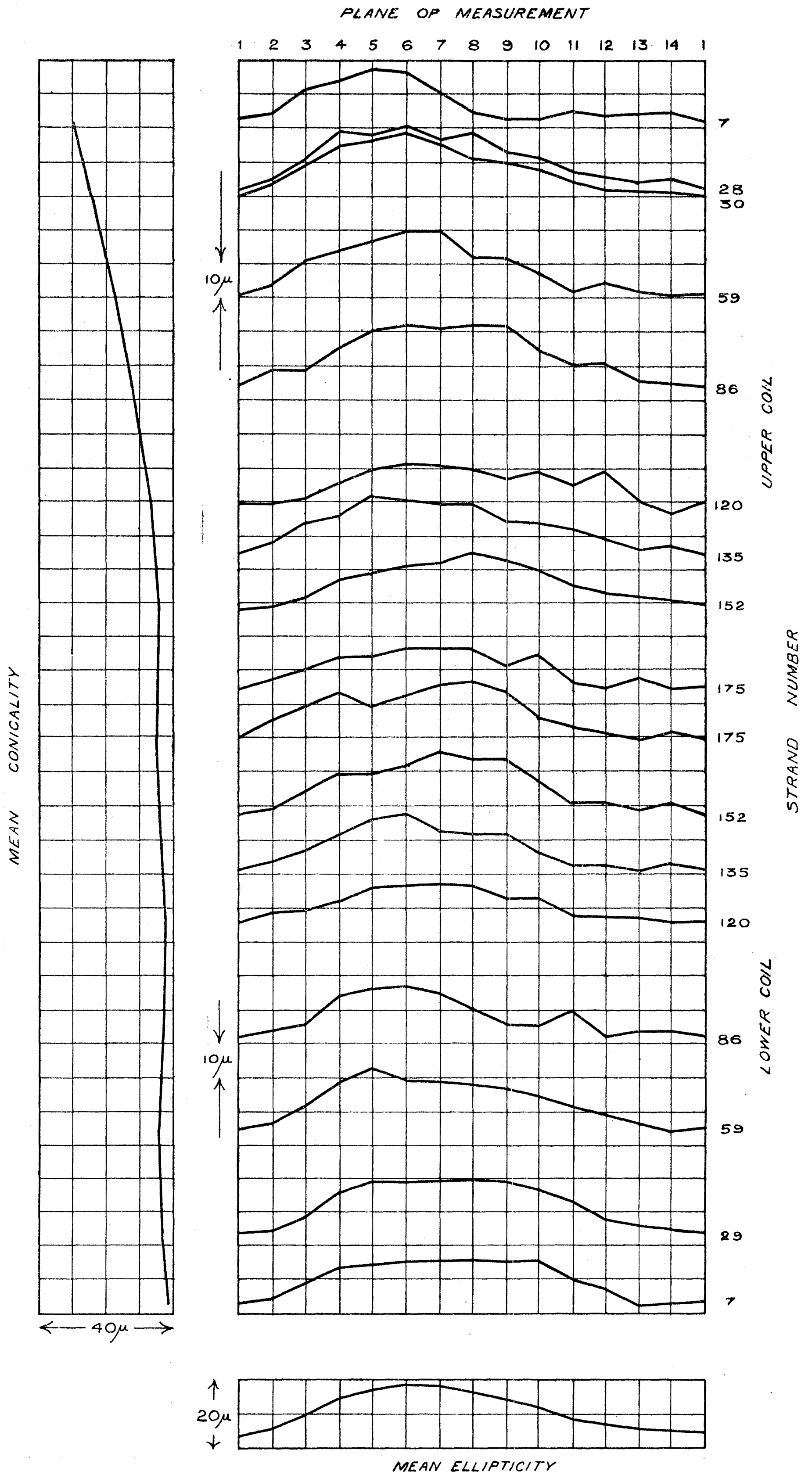

Fig. 15. Fixed cylinder No. 1.

TABLE VI.—Results of Measurements of the Diameters of the Coils, to Centres of Wires, on Fixed Cylinder No. 2. Temperature, 15°·5 C.

Diametral plane number.	Upper coils. Number of strand (from upper end)—								Lower coils. Number of strand (from lower end)—							
	4	20	36	63	90	125	155	170	170	155	125	90	63	36	12	4
	= 33·0000 centims. +								= 33·0000 centims. +							
1	10μ	14μ	17μ	21μ	28μ	28μ	28μ	29μ	28μ	33μ	36μ	36μ	36μ	31μ	36μ	36μ
2	7	13	15	22	24	25	28	26	26	30	30	36	34	29	34	34
3	10	14	18	19	22	26	26	26	26	29	32	33	36	29	35	32
4	12	12	16	17	23	29	28	28	25	27	30	34	40	31	32	32
5	15	16	16	21	25	34	32	27	31	27	39	35	43	37	35	32
6	15	17	20	26	28	36	37	33	38	33	45	37	49	42	34	34
7	18	23	23	29	33	38	38	34	43	38	45	41	49	46	36	39
8	25	28	29	36	38	38	39	37	44	41	47	47	50	47	38	43
9	28	28	31	36	40	39	41	41	44	45	47	47	44	49	43	46
10	26	28	30	36	36	37	44	41	44	48	49	47	40	49	45	50
11	26	28	28	33	37	33	42	41	43	44	49	49	38	45	47	49
12	21	27	25	30	35	32	37	40	39	43	44	46	37	41	51	47
13	14	23	24	28	31	30	34	36	38	43	38	44	35	36	45	44
14	10	18	22	22	30	27	29	33	34	36	38	38	35	35	38	39
Mean .	16_9	20_6	22_4	26_9	30_7	32_3	34_5	33_7	35_9	36_9	40_6	40_7	40_4	39_1	39_2	39_8

Number of observations made to determine the mean diameter of the wire: 44 (upper), 44 (lower).

Greatest difference between any two observations: 1·0 per cent. (upper), 0·7 per cent. (lower).

Mean diameter of wire = 0·559 millim. (upper), 0·559 millim. (lower).

Approximate mean diameter of coils = $33\cdot0027_3$ centims. (upper), = $33\cdot0039_1$ centims. (lower).

Mean diameter of coils, computed from calibration curve = $33\cdot0028_5$ centims. (upper), $33\cdot0039_5$ centims. (lower).

Difference of diameters of neighbouring convolutions = 0·0002 centim. (approx.).

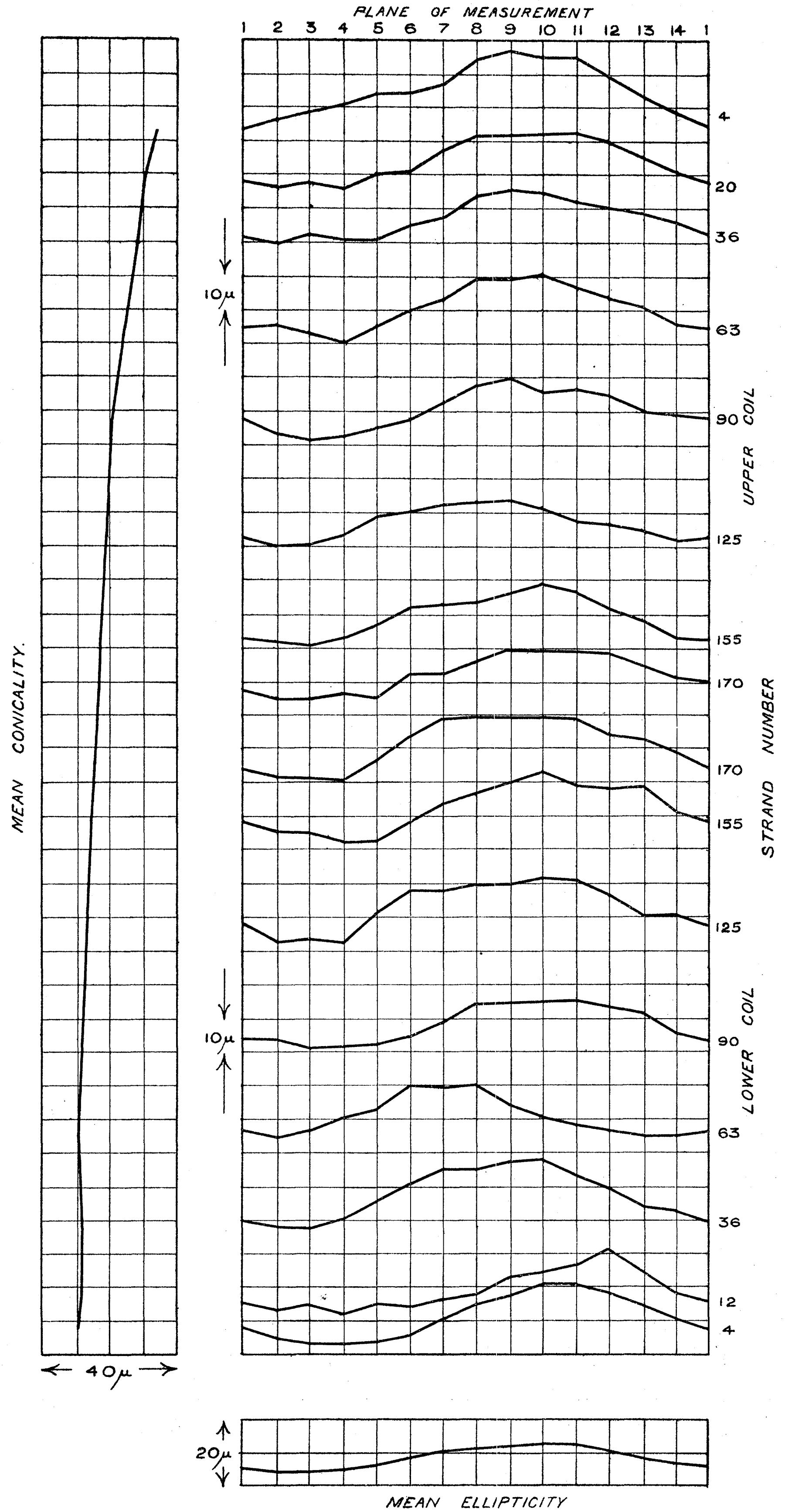

Fig. 16. Fixed cylinder No. 2.

be correct within about 5 in 1,000,000. This conclusion assumes absolute constancy of the dimensions of the coils in the interval between measurement and erection, or the same relative change in dimensions. The values of the mutual induction of the coils on fixed cylinder No. 1 and on suspended cylinder No. 1, and of the coils on the No. 2 cylinders were independently calculated by two of us (T. M. and F. E. S.) in July, 1905 (see Section 10), the difference in mutual induction of the two systems, as calculated, being 0·0062 per cent., that of the first system being the greater. When the ampere balance was completed and the equipment and settings made satisfactory (September, 1905), the difference in mutual induction as found experimentally was, and still is (April, 1907), 0·0054 ± 0·0004 per cent., that of the first system being the greater. Particulars of this experimental determination will be found on p. 515. An experimental estimate of the difference in mean diameters of two coils on a suspended cylinder is $3{\cdot}5\mu \pm 1\mu$ (p. 516), a value in satisfactory agreement with the difference found by direct measurement.

Insulation of Coils.—The insulation of the helices was next proceeded with. For this purpose an **X**-shaped framework of wood was mounted on a metal axle and fitted inside the marble cylinder under observation; the axle was supported on bearings, so that the whole could rotate freely. The marble is semi-transparent, and when an electric lamp is placed inside a cylinder the air gaps between the strands are easily inspected. Under these conditions the appearance of the coils was very beautiful, and close inspection with a lens failed to reveal any defects in the winding. The first measurement of the insulation resistance between adjacent helices indicated it to be of the order of 50 ohms, and the filament of an electric lamp glowed brightly when placed in a circuit containing the two helices and the gaps of what appeared to be marble and air. That the marble was not at fault was shown by tests on the unwound portion of the cylinder, and examination of the gaps with a powerful lens failed to reveal any metallic bridging pieces. In their shortest parts the gaps are 0·15 millim. long, and on the fixed cylinders there are four gaps, each nearly 93 metres wide; several days were spent in their examination, and on one occasion a silk thread was passed between neighbouring strands; the insulation resistance still remained less than 100 ohms. It is unnecessary to describe in detail all the subsequent attempts to locate the leaks. The cylinder and coils were washed with a thin shellac varnish, made by dissolving shellac in ether, but there was no improvement; afterwards they were washed in ether and then absolute alcohol, but without noticeable effect. The cause of the low insulation resistance was apparent, however, for at the bottom of a porcelain dish containing the used alcohol a fine sediment settled which consisted of minute particles of copper. Apparently the copper strands had a very loose, scaly skin, and thousands of these tiny particles of copper were bridging the air gaps and so diminishing the insulation resistance. The washing with alcohol was continued and the strands lightly brushed with a camel-hair brush, a 32-c.p. lamp being lit through the circuit containing the gaps. Eventually two 32-c.p. lamps were placed in parallel, so that the current was about 2 amperes. After the washing with alcohol had been continued for 20 minutes or half-an-hour there was a crackling noise, and hundreds of tiny sparks appeared over the surface of the cylinder; simultaneously the lamps ceased to glow. A measurement of the insulation resistance between the coils showed it to be of the order of 300 megohms; the shorting pieces had been burnt out with a most satisfactory result. To prevent the recurrence of the low insulation resistance the washing was continued; occasionally the lamps glowed, but with continued washing the shorts were burnt out as before. When the insulation resistance was of the order of 1000 megohms, with an applied pressure of 20 volts, the cylinder was lifted from its bearings and placed in others secured to a framework resting on the top of a bath of melted paraffin wax. About one-third of the circumference of the cylinder dipped into the hot liquid. The cylinder was rotated until the marble was sufficiently warm to keep the wax on its surface in a liquid condition; it was then removed for the wax to solidify, and afterwards dipped once more, in order to obtain a thicker coat. The insulation resistance was measured while the cylinder was hot, and also when the wax had solidified; the latter value was always the greater. After the lapse of a week or ten days, the ends and interior of the cylinder were cleaned and preparations made for further measurements of diameters. The wax was carefully removed from several parts of the cylinder and the strands cleaned by rubbing with a small pad of silk; the measurement of six or eight diameters was then carefully made, the steel gauges being set up as before. A summary of these measurements follows (see Table VII.), from which it is inferred that there was no appreciable change in the diametral dimensions.

In one of the large cylinders the insulation resistance between the two upper and the two lower helices was at first comparatively low, viz., 2000 megohms. The cause of this was found to lie in the internal ivory plugs through which the copper leads passed. As it was impossible to remove these without stripping the cylinder, they were slotted in such a way as to reduce the section of the conducting material; the insulation resistance was thus increased to 10,000 megohms. Insulation tests on fresh ivory pieces were invariably satisfactory, but two such pieces inserted in the ampere balance appeared to deteriorate with time, and eventually had to be replaced by ebonite.

To prevent damage to the surface of the wax with which the coils were coated, it was thought desirable to cover it with a harder insulating material. Shellac varnish was tried and used for the larger coils, but the suspended ones were untouched owing to the results of experiments on equal surfaces of paraffin wax and shellac varnish. The latter was found to be much more hygroscopic than the former. From the measurements made it is estimated that each suspended cylinder coated with paraffin wax would change in mass by 6·8 milligrammes if removed from a dry atmosphere to one saturated with moisture; had the outer coating been shellac varnish the corresponding change would be 146 milligrammes.

TABLE VII.—In which the Diametral Measurements on all the Coils, before and after Insulating with Paraffin Wax, are Compared.

Coil.	Diametral plane number.	Strand number.	Diameter before insulating.	Diameter after insulating.	Difference.
			centims.	centims.	
Suspended No. 1 . . .	1	38	20·3579	20·3576	-3μ
	1	92	81	80	-1
	9	38	80	80	0
	9	92	82	80	-2
				Mean difference =	-1_5
Suspended No. 2 . . .	1	4	20·3584	20·3586	$+2\mu$
	1	80	88	86	-2
	1	104	85	84	-1
	9	4	84	84	0
	9	80	84	83	-1
	9	104	88	89	$+1$
				Mean difference =	-0_2
Fixed No. 1, upper part	1	175	33·0010	33·0006	-4μ
	3	175	16	15	-1
	9	175	17	18	$+1$
	12	175	10	07	-3
	1	59	32·9995	32·9994	-1
	8	59	33·0006	33·0009	$+3$
	12	59	32·9999	01	$+2$
	10	59	33·0002	00	-2
				Mean difference =	-0_6
Fixed No. 1, lower part	1	175	33·0008	33·0008	0μ
	3	175	17	17	0
	10	175	13	10	-3
	12	175	09	07	-2
	1	59	08	07	-1
	8	59	21	22	$+1$
	11	59	14	18	$+4$
	12	59	12	09	-3
				Mean difference =	-0_5
Fixed No. 2, upper part	1	170	33·0029	33·0028	-1μ
	5	170	27	26	-1
	8	170	37	34	-3
	2	125	25	25	0
	5	125	34	33	-1
	10	125	37	37	0
				Mean difference =	-1_0
Fixed No. 2, lower part	4	170	33·0025	33·0024	-1μ
	6	170	38	41	$+3$
	14	170	34	33	-1
	1	125	36	37	$+1$
	6	125	45	45	0
	10	125	49	50	$+1$
				Mean difference =	$+0_5$

SECTION 7.—ERECTING AND ADJUSTING THE INSTRUMENT.

To facilitate the setting of the fixed cylinders on the balance table, two spirit levels and four sets of cross-wires are mounted on the upper plane end of each. The sensitiveness of the levels is such that a tilt of 20 seconds of arc displaces the air bubbles 1 millim. from their central position. A Whitworth surface plate was levelled and on this the spirit levels were set; afterwards a marble cylinder was rested on the plate, which was then relevelled, and two other levels placed at right angles on the upper end of the cylinder; the displacement of a bubble from its mid-position was practically unreadable, the parallelism of the plane ends of the cylinder being thus confirmed. The levels were screwed to the cylinder and re-set to read correctly.

At opposite ends of two diameters at right angles, four slides with upright pieces carrying cross-wires are screwed to the upper plane end of each cylinder (see fig. 2, Plate 7). These are adjustable in azimuth and the final setting is such that the line joining the points of intersection of opposite cross-wires lies in a plane containing the axis of the coils. The setting was made by suspending a weighted thread inside the cylinder so as to coincide with the axis, the indicator of this adjustment being a centre finder. A cathetometer telescope was next focussed on the thread and on one of the cross-wires, and was altered in position until the plane of the vertical wire of the telescope lay in the same plane as the thread and the vertical cross-wire. The cross-wires opposite to this latter were then adjusted in azimuth until they also lay in this plane.

Each suspended cylinder carries a brass T-piece supporting two spirit-levels at right angles; in addition a tripod is supported which in turn carries a pointed rod to be seen projecting above the fixed cylinder in fig. 2 (Plate 7). The ends of the tripod legs enter into the cylinder and are turned to be an exact fit. The rod is for the adjustment to coincidence of the axes of the fixed and suspended coils; it is adjustable in vertical height and its pointed extremity lies in the axis of the coils; it is set so that when its extremity is in the plane of the cross-wire intersections the suspended and fixed coils are symmetrical as regards vertical height. The coils are concentric when the lines joining opposite cross-wires intersect in the axis of the rod.

Concentric cable is used for the leads to and from the various coils. The junctions of the cable with the fixed coils are shown in fig. 8, and those with the suspended coils in fig. 10. In the case of the fixed coils the ends of the wire leading to any one of the coils were first soldered to small brass blocks supported by a strip of ebonite which in turn was screwed to the cylinder; the ends of the leads of the concentric cable were similarly soldered to two small brass pieces which were screwed in contact with those leading to a coil. The cable could thus be easily removed without in any way damaging the connecting pieces. In the case of the suspended coils, the wires leading from them terminate at the brass connectors inside the cylinder. These connectors are grooved, and into the grooves stout pieces of copper wire are soldered and lead directly to the concentric cable. The junctions are shown in fig. 10, p. 482. To take part of the weight of the cable attached to the small cylinders and thus prevent the connections from being strained, two small curved arms project from each suspended cylinder, and to these the cables are clamped. They may be seen just above the fixed cylinders in fig. 2, Plate 7. Each small cylinder is suspended by three phosphor-bronze wires w, w, w, fig. 6, Plate 8, attached to a three-limbed spider S; to these wires the cylinders are hooked by brass strips screwed to the interior of the cylinder and bent at right angles at their lower ends; the feet thus formed fit into recesses cut in the marble. The effective length of the phosphor-bronze wires is adjustable, and by such adjustment, together with an alteration in position of the heavy nuts on the limbs of the spider, the cylinders are levelled. On the completion of the suspended coils and their fittings, the mass of one suspended system was different to that of the other by 2 grammes in a total of 5500 grammes; equality was obtained by loading one of the **T**-pieces.

Above each suspended cylinder a commutator C (fig. 17) is supported by one arm of the three-limbed spider. The concentric cables from the coils pass to this commutator, and from the latter two bare copper wires, shown black, are taken to an ebonite block B. A second ebonite piece B′ is screwed to the main pillar of the balance, and between B and B′ 160 silver wires are suspended; the diameter of a single wire is 1 mil (25μ). A long length of concentric cable completes the circuit to a multiple commutator and plug board. By appropriately setting the commutator C, the current can be made to circulate in the same or in opposite directions in the two helices, fig. 3, and by suitable connections to the multiple commutator and to the commutator C the insulation resistance between the helices can be measured. Wherever possible, the non-concentric leads to and from the coils are kept very short and placed radially or parallel to the axes of the cylinders; also, the feed and return leads are placed as close together as practicable; the design thus ensures the minimum of force between the current in the fixed coils and that in the commutator and leads to the suspended coils. The commutator C is a simple one of four copper quadrants with a turning head of ebonite, carrying two contact pieces; these latter are insulated from each other and are attached to the ebonite head by hard springy copper; they are split midway to ensure uniform pressure on all the quadrants when the turning head is correctly set. The commutator can reverse the current in one of the helices only, but the concentric leads from both coils pass to the commutator block; this is for convenience in making the connections, and to obtain symmetry of distribution of the current leads. By making one of the contact pieces (say Q, fig. 17, *a*) slightly longer than the other, the commutator may be set in position suitable for making the insulation test between the two helices.

The 160 silver wires are divided into two portions, which are insulated from each other; in any one division the 80 strands lie in two parallel layers, the system being formed by winding a continuous length of silver wire over two brass rods cut with a screw thread of $\frac{1}{36}$-inch pitch; no two strands are in contact. After the completion of the winding the silver wires were soldered to the rods by running a very soft fusible metal into the V-grooves. The length of a strand is 10·5 centims., but the distance between the rods is a little less than this. Fig. 17 illustrates the manner in which a set of silver wires is placed in position. Before their insertion the sensitiveness of the balance was such that an added load of 1 milligramme produced a deflection of 0·9 scale division; afterwards the corresponding deflection was 0·85 scale division, a diminution in sensitiveness of 6 per cent. only. The concentric cable attached to B′ is clamped to the main pillar of the balance, and passes through a hole drilled in the base of the balance table to the multiple commutator and plug board described on p. 521.

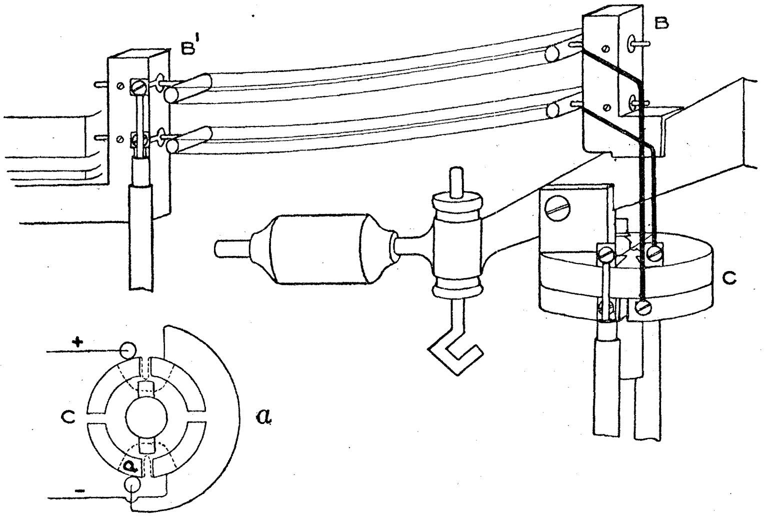

Fig. 17. Leads and commutator for suspended coil. *a* shows diagrammatic plan of commutator (looking upwards).

The first setting of the coils on the tables of the balance involved the following operations:—

(*a*) Levelling of one suspended cylinder by adjustment of the lengths of the suspension wires and of the masses on the limbs of the spider.

(*b*) Levelling of the concentric fixed cylinder.

(*c*) Approximate setting of the fixed cylinder, so that the mean diametral plane of all the coils on it coincided with the mean diametral plane of the suspended coils.

(*d*) Levelling and vertical adjustment of the other fixed cylinder until its mean diametral plane coincided with the corresponding plane of the first fixed cylinder.

(*e*) Levelling and adjustment in vertical height of suspended cylinder No. 2 in order that conditions (*a*) and (*c*) should hold with it.

(*f*) Setting of each pair of cylinders to be concentric.

This mechanical method of setting the coils is subject to errors which may be serious in an instrument intended for observations of high precision. So far as we know, no attempt has hitherto been made to set two coaxial coils in a position of maximum force by an electrical method. The ampere balance lends itself to such a setting, and the accuracy thereby attained is considerable.

ELECTRICAL METHOD OF SETTING THE COILS.

(1) *Setting to Coincidence of the Mean Diametral Plane of the Suspended Coils with the Corresponding Plane of all the Coils on the Concentric Fixed Cylinder.*—If M_u is the difference of the mutual induction of the upper fixed coils and the circular ends of the suspended coils, and M_l that of the lower fixed coils and the same, and if the currents flow in opposite directions in the upper and lower fixed coils, the force between them and the suspended system is $\gamma_h\gamma\,(M_u+M_l)$, where γ_h is the current through the fixed coils and γ is the current per unit axial length in the current sheet equivalent to the current in the suspended coils. This is the maximum force possible for the coaxial system, and variations in the force for small axial displacements are also small. The rate of change was determined by passing a current of 1·02 amperes through all the balance coils, the direction of the current in the various helices being such that the two suspended systems were subject to the maximum axial forces, but opposed to each other so that the total turning moment on the beam was small and almost nil. One set of fixed coils was now displaced through known axial distances and the change in the resting point of the balance observed; that position of these fixed coils when the force due to them is a maximum is the correct axial position for minimum mutual induction. The results obtained with one of the systems are plotted in fig. 18; for such displacements as those made the force is approximately given by the expression:—maximum force multiplied by $(1-11\times10^{-8}d^2)$, where d is the displacement in mils and is measured from the plane of minimum mutual induction. The force may also be written:—maximum force multiplied by $(1-0{\cdot}017x^2)$, where x is the displacement in centimetres. For a displacement of 10 mils (254μ) the change in force is 11 in 1,000,000, which for a current of 1 ampere is equal to 0·04 dyne approximately.

There is, however, another method of setting the cylinders which is even more sensitive. If, instead of the currents flowing in opposite directions in the upper and lower fixed coils, they flow in the same direction, the force between them and the suspended system is $\gamma_h\gamma\,(M_u-M_l)$. When the coils are set in their correct position, this is nearly the minimum force possible for the arrangement, and the rate of change of force with axial displacement is large. Observations were made with the current circulating in this manner in one set of fixed coils, the current in the system on the opposite side of the balance being so directed that no measurable force was produced by it. The correct position of the fixed coils in one of the systems is when the force is equal to 0·14 dyne when the current is 1 ampere and circulates in the same direction through all the coils of the system. The corresponding force for the other system is 0·34 dyne. The value of the force for a displacement d mils from the correct axial position when 1·02 amperes is passing is given by the expression $4{\cdot}8 \times 10^{-4} dg$ dynes,

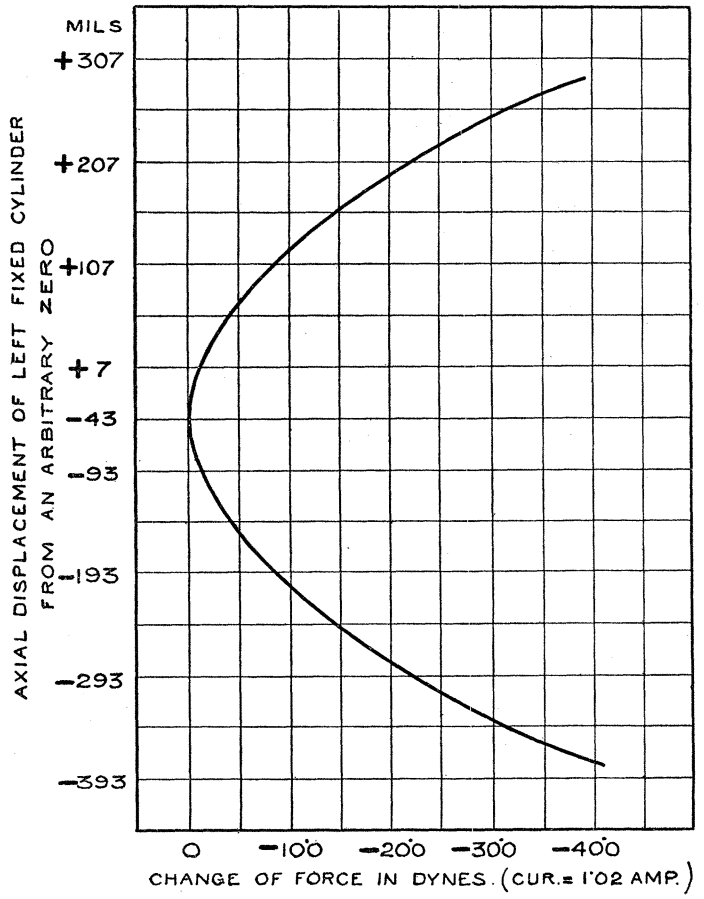

Fig. 18. Change of force due to axial displacement of coils.

where $g = 981$ centims./sec^2. The force is also given by $0{\cdot}19xg$, where x is in centimetres. Thus, for an axial displacement of 1 mil of the fixed or suspended coils, a change in balancing mass of 0·48 milligramme results; the axial position may therefore be fixed to less than 1 mil.

(2) *Setting of the Fixed and Suspended Coils to be Concentric.*—When the coils are coaxial the mutual induction is a minimum with respect to radial position, and when the current flows in opposite directions in the upper and lower fixed coils the force changes with displacement from the coaxial position. The change in force with radial displacement was measured for both fixed cylinders, the displacements being made in two directions at right angles; the results were plotted in four curves, of which two (those for the left fixed cylinder) are given in fig. 19. Inspection shows that the rate of variation of mutual induction with radial displacement increases with

the value of the latter, and that the position for minimum rate of change of mutual induction may be deduced with considerable accuracy. The force in every case is approximately given by the expression:—maximum force multiplied by $(1 + 5{\cdot}8 \times 10^{-8}d^2)$, where d is the radial displacement in mils from the coaxial position; the corresponding expression when the displacement is in centimetres is:—maximum force multiplied by $(1 + 0{\cdot}009x^2)$. Thus a displacement of 10 mils from the coaxial position produces a change in force of 5·8 parts in 1,000,000. By the aid of the curves the radial setting can be made within 2 mils, so that the error introduced by faulty radial setting is not greater than 1 part in 5,000,000.

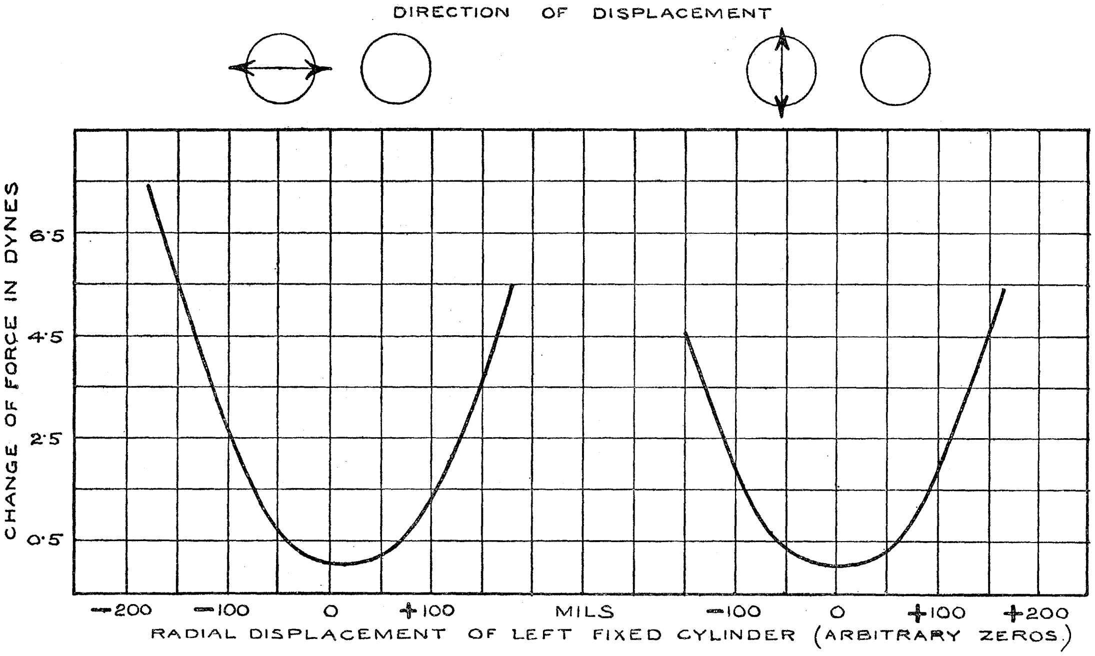

Fig. 19. Variation of force caused by radial displacement of coils.

Effect of the Leads.—It was possible that the current in the leads to and from the fixed coils might exercise an appreciable force on the suspended system, and that the movable leads connected to the latter might be affected by the current in the fixed system. This was tested by completing the circuit through the leads only of the fixed coils and through the suspended system, and noting the effect; afterwards the current was passed through the leads only of the suspended coils and through the fixed coils, and the result again noted. Absolutely no force was detectable, and on a subsequent repetition of the experiment the same result was obtained.

Insulation Tests.—When making a determination of current, the greatest difference of potential between any portion of the balance and the earth was about 74 volts, and the greatest difference of potential between neighbouring strands on the same cylinder was less than 7 volts. It is desirable, therefore, that the insulation resistance between the balance circuit and earth should not be less than 100 megohms, and that between neighbouring strands should not be less than 10 megohms. The insulation resistance of the various parts has been measured on several occasions, and the lowest measured resistance between any two adjacent coils is 2000 megohms, and between the balance circuit and earth it is 1000 megohms. The applied pressure in the former measurements was, in general, 40 volts, and for the latter 200 volts. When the coils are arranged in two groups, so that each group consists of one coil of each pair, the insulation resistance is 1500 megohms. The first measurement was made in March, 1905, and the last in April, 1907.

SECTION 8.—ADVANTAGES OF DUPLICATING THE COILS.

As previously mentioned, there is a set of coils at each end of the balance. Several advantages are gained by this arrangement. In the first place, the force to be measured is doubled by using the two sets of coils, and the accuracy of the measurement is therefore increased. A much greater advantage, however, arises from the symmetry thus obtained, for mechanical disturbing causes will, on the whole, tend to be neutralised.

One of the principal disturbances arises from convection currents produced by the heat generated in the coils, and in the flexible connections to and from the suspended systems. Another is the change of buoyancy due to change of temperature of the air in which the suspended coils hang. Both these produce a fairly rapid drift of the rest-point of the balance when a single set of coils is used, but when both sets are employed the steadiness of the balance is greatly improved. The extent of this improvement will be seen on reference to fig. 20, which shows four pairs of curves taken to test this matter. During all these tests the adjacent helices on each cylinder were connected up, so that the current (if any) flowed in opposite directions in adjoining wires, thereby making the windings inoperative, and obviating the necessity of keeping the current very constant.

Several sets of about 12 readings of the swings of the balance were taken under each of the following conditions respectively :—

(*a*) No current through either set of coils.
(*b*) Normal current through both sets of coils.
(*c*) ,, ,, ,, left-hand set of coils.
(*d*) ,, ,, ,, right-hand set of coils.

The rest-points were calculated from each group of three successive readings throughout a set, and the values tabulated, thus giving the rest-points for each half period. From the several sets of observations taken under each of the conditions (*a*), (*b*), (*c*), (*d*) respectively, those showing the least and greatest drifts were plotted, the former being shown in full lines and the latter dotted in fig. 20. The points thus obtained were joined by straight lines, and no attempt made to smooth out irregularities. In this figure the middle of the balance scale is denoted by 100; one division of the scale is about $\frac{1}{10}$th of a millimetre (actually 0·095 millim.), and as this is represented on the curve by a length of 100 millims., the magnification is over 1000.* In spite of this large magnification the resulting lines are fairly regular, a fact which bears eloquent testimony to the excellence of workmanship and definiteness of

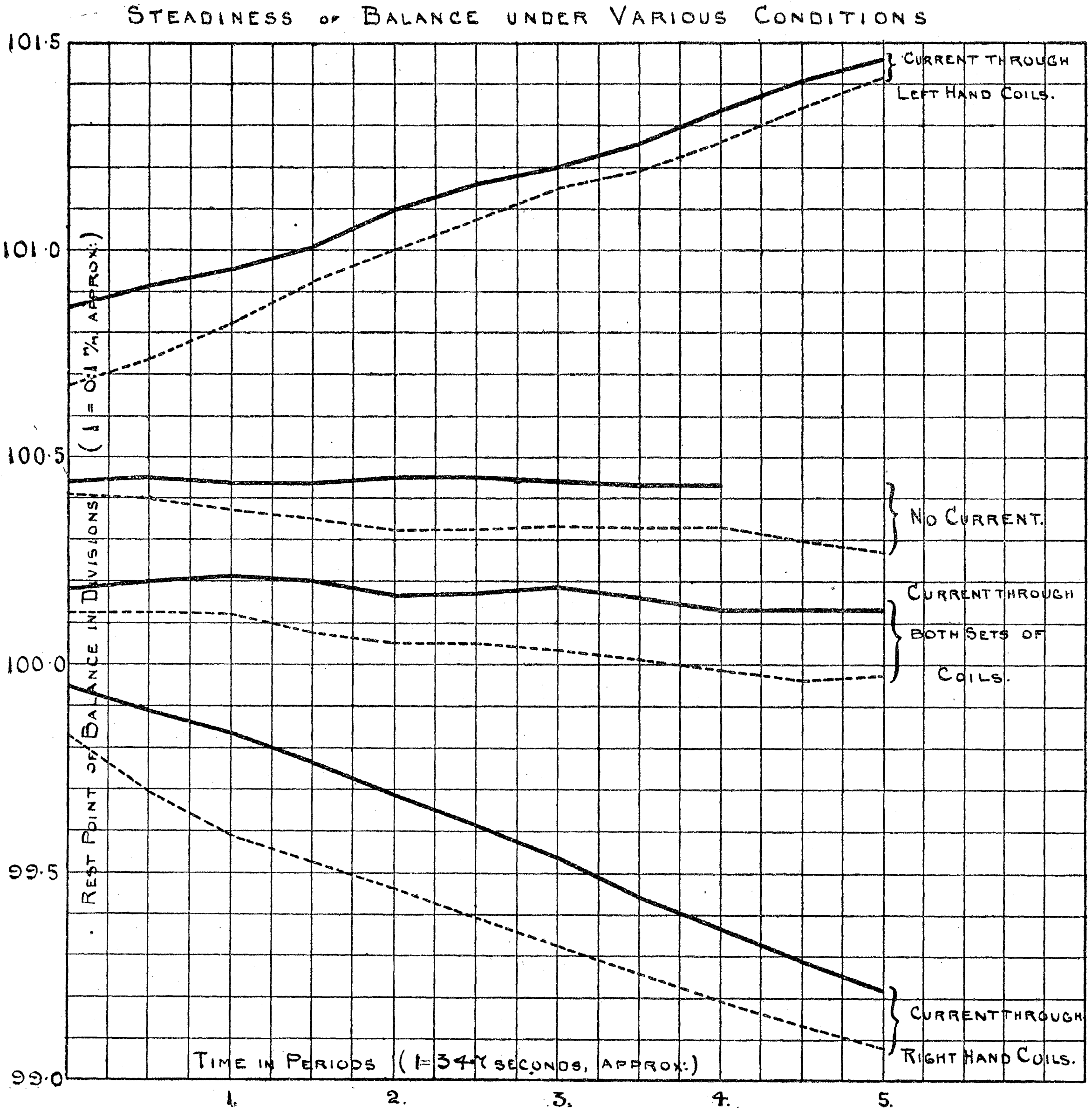

Fig. 20.

behaviour of the instrument. The perfection of the arrangements for reading the scale are also of a high order, seeing that 1 millim. on the ordinates of the curves corresponds to a length of less than 1 micron ($\frac{1}{1000}$ millim.) on the scale, and the regularity of the curves shows that the scale can be read to an accuracy of this order under favourable conditions.

---

* In fig. 20 the scale is about $\frac{6}{10}$ of the original.

From the curves it will be seen that with no current through the coils, or with normal current through both sets, the drift was comparatively small, amounting in the worst case to only 0·15 division (0·014 millim.) in five complete periods. With current through one set only, however, the drift was much greater, amounting to 0·76 division in five periods in the lowest curve, the direction being such as to indicate increase in weight of the suspended coil through which the current was flowing. As the sensitiveness of the balance during the above tests was 0·82 division for the reversal of 1 milligramme, the apparent rate of change of mass amounted to 0·38 milligramme per period (or 0·65 milligramme per minute), when current passed through one set of coils only, whilst with current through both sets the greatest change was about a fifth as great. There is, therefore, a considerable increase in steadiness of the rest-point when both sets of coils are used.

Other advantages of two sets of coils are (*a*) that two independent determinations of the ampere can be made by using the sets separately; (*b*) the two sets being very nearly alike, one serves as a check on the constancy of the other set by arranging them in opposition and weighing the difference between their effects, which difference should, of course, be constant for a given current; (*c*) the difference in the force, if any, produced by changing the relative positions in azimuth of the fixed and suspended helices as suggested by Lord RAYLEIGH* can be readily found by making the differential test above mentioned with one set of coils in a certain relative position, whilst that of the other set is varied. The result of such a test is given on p. 517, Section 11.

A lengthy experience with the current weigher proves that the self-checking facilities provided in the instrument are of very great utility and form one of the most valuable features of the balance.

SECTION 9.—FORCE BETWEEN HELICAL CURRENT AND COAXIAL CIRCULAR CURRENT SHEET.

As mentioned in the introductory section (p. 467) of this paper, the formula used for calculating the force between the fixed and suspended coils is due to the late Professor J. V. JONES, viz. :—

$$F = \gamma_h \gamma (M_2 - M_1) \qquad (1),$$

the meanings of the quantities being as there defined. This formula is rigorously exact for a helix and current sheet, and a very close approximation for two helices of fine pitch. The order of the error is considered in Appendix B, p. 541.

The arrangement of the coils in the actual instrument may be represented diagrammatically in section by fig. 21, which is meant to indicate a vertical section through the vertical axes of the windings, the vertical dotted lines being the axes of the coils.

---

* 'B.A. Report,' Dover, 1899, p. 292.

Here a_1 and a_1' represent the lower and upper ends respectively of the left-hand suspended coil, whilst CBD and GJH indicate the lower and upper helices on the left-hand fixed cylinder. B and J are supposed to be on the mid-planes of the respective helices. The right-hand suspended and fixed coils are similarly represented by a_2 and a_2' and C′B′D′, G′J′H′.

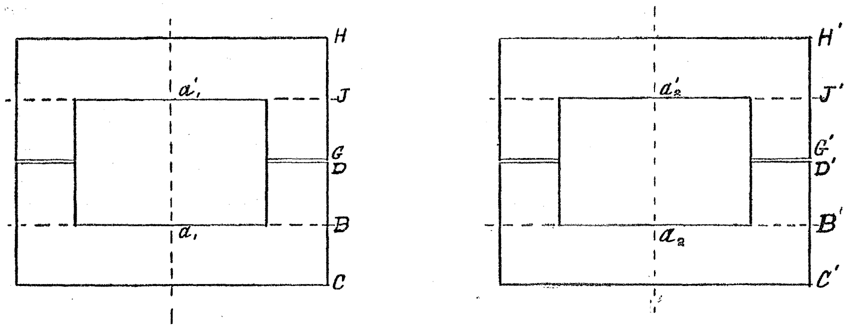

Fig. 21. Vertical section through coils of current weigher.

If only one pair of coils be used for making a determination, the change of apparent mass due to a reversal of current in the fixed coils enables the current strength to be calculated directly. Using both pairs, however, introduces cross actions between them, and the forces due to these must be calculated or eliminated.

To distinguish the forces between the coils on one pair of cylinders from those between the suspended coil of one pair and the fixed coils of the other pair, we have called them "direct" and "secondary" forces respectively. For example, the forces between a_1, a_1' and CD, GH are called "direct forces," whilst the vertical component of the force exerted on a_1, a_1' by C′D′ and G′H′ is called a "secondary" force. For shortness, these are designated by D and S.

A little consideration will show that when the current in a_1, a_1' is in the same sense as that in a_2, a_2', and both sets of coils are in use, assisting, the electromagnetic force operative is the sum of the direct and secondary forces (D+S), whilst if the currents in the suspended coils are opposite in sense, the resultant force is (D−S).* Two sets of observations are therefore necessary to eliminate the secondary forces.†

Horizontal components of the cross forces will exist, as well as forces due to the action of the suspended coils on each other tending to push them apart or pull them together. These forces, however, are so small compared with the mass of the suspended cylinders that no appreciable displacement is produced. Careful observation by a telescope, made with a view to detecting side displacement, led to a negative result.

Considering one set of coils, say the left-hand ones in fig. 21, the value of (M_2-M_1)

---

* In each case the directions of the currents in the two pairs of coils (left and right hand) are made such as will produce torques on the beam in the same sense.

† Mr. SEARLE has developed an expression by which these secondary forces may be calculated.

in formula (1), p. 507, was determined as follows:—The mutual induction of one of the two helices on CD, the lower half of the fixed cylinder, and the circle a_1, was calculated by finding M for the circle a_1 and helix BC (half of CD) and doubling it. To find M_1 two mutual inductions were calculated, viz., that between a_1' and a helix of length JD, and that between a_1' and a helix of length JC, and taking the difference. It was therefore necessary to calculate three coefficients of mutual induction; these, for convenience of reference, are designated by $M_{\odot}$, $M_{\odot_1}$, and $M_{\odot_2}$ respectively. The value of (M_2-M_1) for both helices* on CD is given by

$$M_2-M_1 = 2\{2M_{\odot}-(M_{\odot_2}-M_{\odot_1})\} \quad . \; . \; . \; . \; . \; . \; . \; . \quad (2).$$

For the current sheet a_1, a_1' and the helices on GH the value of (M_2-M_1) was determined from $M_{\odot}$, $M_{\odot_1}$, and $M_{\odot_2}$ by the increment formula

$$\frac{dM_{\odot}}{M_{\odot}} = q\frac{dA}{A} + r\frac{da}{a} + s\frac{dx}{x}\dagger \quad . \; . \; . \; . \; . \; . \; . \; . \; . \quad (3),$$

which gives the change in $M_{\odot}$ due to small changes in dimensions, A being the radius of the helix, a that of the circle, x the length of the helix, and q, r, and s coefficients determined as shown on pp. 200, 201 (*Ibid.*).

The sum of the two values of (M_2-M_1) thus obtained gives the total for the left-hand set of coils, and is designated by M_L.

As the dimensions of the right-hand set of coils are very nearly equal to those of the left-hand set, the increment formula was employed for finding the two values of (M_2-M_1) for this side of the current weigher and their sum called M_R. The "direct" force between the fixed and suspended systems when arranged to assist each other may therefore be written

$$F = \gamma_h\gamma(M_L+M_R) \quad . \; . \; . \; . \; . \; . \; . \; . \; . \; . \; . \quad (4),$$

and the mass required to balance this force is given by

$$m = \gamma_h\gamma\frac{M_L+M_R}{g} \quad . \; . \; . \; . \; . \; . \; . \; . \; . \; . \; . \quad (5).$$

Taking the values of M_L and M_R determined on p. 514, and assuming g to be 981·20, we get for both sets of coils (neglecting secondary forces)

$$m\,(\text{for 1 ampere}) = 0{\cdot}1 \times \frac{0{\cdot}1\times 184}{12{\cdot}9830} \times \frac{51922{\cdot}47\ddagger}{981{\cdot}20}$$

$$= 7{\cdot}49964 \text{ grammes;}$$

or change of mass on reversal of 1 ampere = 14·99928 grammes . . . . . . (6).

---

* As previously mentioned, each cylinder has double-threaded screw grooves.

† 'Roy. Soc. Proc.,' vol. 63, p. 197, 1898.

‡ There are 184 turns on each suspended cylinder, the axial length of which is $12{\cdot}983_0$ centims.

Similarly for reversal of 1 ampere in left-hand set we get

$$m_l = 7{\cdot}49987 \text{ grammes} \quad \ldots \ldots \quad (7),$$

and for right-hand set

$$m_r = 7{\cdot}49942 \text{ grammes} \quad \ldots \ldots \quad (8).$$

Further, we may express the current in amperes in terms of the mass to balance change of force on reversal as

$$\text{Amperes} = \sqrt{m/14{\cdot}99928} \quad \ldots \ldots \quad (9),$$

when both sets of coils are used (secondary effects eliminated), or

$$\text{Amperes} = \sqrt{m/7{\cdot}49987} \text{ for left-hand set} \quad \ldots \quad (10)$$

and

$$\text{Amperes} = \sqrt{m/7{\cdot}49942} \text{ for right-hand set.} \quad \ldots \quad (11).$$

Again, by taking the sum of the balancing masses obtained in a D+S observation and a D−S observation* with the same current passing, and calling this m', we have

$$\text{Amperes} = \sqrt{m'/29{\cdot}99856} \quad \ldots \ldots \quad (12),$$

the formula employed in the great majority of the measurements.

SECTION 10.—CALCULATION OF MUTUAL INDUCTION OF HELIX AND CIRCULAR END OF COAXIAL CURRENT SHEET.

The formula employed is

$$M_{\Theta} = \Theta\,(A+a)\,ck\left\{\frac{F-E}{k^2}+\frac{c'^2}{c^2}(F-\Pi)\right\}\dagger. \quad \ldots \ldots \quad (13),$$

where

Θ = angular length of helix, A = radius of helix, a = radius of circle,

x = axial length of helix,

$c^2 = 4Aa/(A+a)^2, \qquad c'^2 = 1-c^2,$

$k^2 = 4Aa/(A+a)^2+x^2, \qquad k'^2 = 1-k^2,$

and F, E and Π are complete elliptic integrals of the 1st, 2nd and 3rd kinds respectively; F and E are to modulus k, and

$$\Pi = \int_0^{\frac{\pi}{2}} \frac{d\psi}{(1-c^2\sin^2\psi)(1-k^2\sin^2\psi)^{\frac{1}{2}}} \quad \ldots \ldots \quad (14).$$

---

* See p. 508.

† J. V. JONES, 'Roy. Soc. Proc.,' vol. 63, p. 198, 1898.

Putting $c'/k' = \sin\beta$, the quantity $(\mathrm{F}-\Pi)$ can be expressed in terms of complete and incomplete integrals of the 1st and 2nd kinds*; thus

$$c^{-1}k'^{2}\sin\beta\cos\beta\,(\mathrm{F}-\Pi) = -\tfrac{1}{2}\pi-\mathrm{F}\,(k)\,\mathrm{F}\,(k',\beta)+\mathrm{E}\,(k)\,\mathrm{F}\,(k',\beta)+\mathrm{F}\,(k)\,\mathrm{E}\,(k',\beta) \quad . \quad (15).$$

The various elliptic integrals required in equations (13) and (15) were calculated in three ways, viz. :—

(*a*) by interpolation from LEGENDRE'S tables ;

(*b*) directly by successive quadric transformation ;†

(*c*) directly by series. ‡

Method (*a*) was used by two of us independently, one (F. E. S.) employing a calculating machine, and the other (T. M.) using logs. To obtain the desired accuracy, 1st, 2nd and 3rd differences were required in the interpolations.

As a check on possible misprints in the tables, one of us (T. M.) calculated all the complete integrals directly by series, and also both complete and incomplete, by method (*b*). When the numerical coefficients in the series had been evaluated, the method (*c*) proved quite expeditious. For the convenience of others who may not have access to tables, these coefficients and their logs are given in Appendix A. Successive quadric transformation, however, proved quickest when the angle β was well conditioned, three or four transformations being sufficient. But in the case of M_{Θ_1} the angle β was nearly 45°, and to obtain the seventh figure accurately ten-figure logs were used.

For any particular value of M_{Θ} the corresponding increment coefficients q, r, and s are given by the expressions

$$\left.\begin{aligned} q &= \frac{\Theta ck}{\mathrm{M}_{\Theta}}\mathrm{A}\left\{\mathrm{F}+\frac{\mathrm{A}-a}{2a}(\mathrm{F}-\Pi)\right\} \\ r &= \frac{\Theta ck}{\mathrm{M}_{\Theta}}a\left\{\mathrm{F}-\frac{\mathrm{A}-a}{2\mathrm{A}}(\mathrm{F}-\Pi)\right\} \\ s &= -1-\frac{\Theta ck}{\mathrm{M}_{\Theta}}(\mathrm{A}+a)\left\{\left(1-\frac{2}{k^2}\right)\mathrm{F}-\frac{2}{k^2}\mathrm{E}\right\} \end{aligned}\right\}\S \quad . \quad . \quad . \quad . \quad . \quad (16).$$

Denoting $\dfrac{\mathrm{M}_{\Theta}}{\Theta\,(\mathrm{A}+a)\,ck}$ by Z, these may be written

$$q = \frac{\mathrm{A}}{2a\mathrm{Z}}(\mathrm{F}-c'\Pi), \qquad r = \frac{a}{2\mathrm{AZ}}(\mathrm{F}+c'\Pi), \qquad s = -1-\mathrm{P}_0(k)/\mathrm{Z} \quad . \quad . \quad (17),$$

where

$$\mathrm{P}_0(k) = \left(1-\frac{2}{k^2}\right)\mathrm{F}+\frac{2}{k^2}\mathrm{E}.$$

---

* CAYLEY, 'Elliptic Functions,' § 183.

† CAYLEY, Chapter XIII.

‡ CAYLEY, Chapter III, § 77.

§ J. V. JONES, 'Roy. Soc. Proc.,' vol. 63, pp. 200, 201.

The mean (arithmetical) dimensions chosen for calculating the values of $M_{\odot}$, $M_{\odot_1}$, and $M_{\odot_2}$ respectively, were those of the left suspended coil and the lower helices on the left fixed coils, and are given in Table VIII.

TABLE VIII.

$$2\mathrm{A} = 33{\cdot}0016_9 \text{ centims.}, \quad 2a = 20{\cdot}3583_3 \text{ centims.}$$

From these we get

$$\begin{aligned} \mathrm{A}+a &= 26{\cdot}68001, & \log(\mathrm{A}+a) &= 1{\cdot}4261860, \\ \mathrm{A}-a &= 6{\cdot}32167_4, & \log(\mathrm{A}-a) &= 0{\cdot}8008325, \\ c^2 &= 0{\cdot}9438574, & \log c^2 &= \bar{1}{\cdot}9749064, \\ c &= 0{\cdot}9715233, & \log c &= \bar{1}{\cdot}9874532, \\ c'^2 &= 0{\cdot}0561426, & \log c'^2 &= \bar{2}{\cdot}7492925, \\ c' &= 0{\cdot}2369443, & \log c' &= \bar{1}{\cdot}3746462. \end{aligned}$$

These quantities are required for the three values of M to be calculated. The remaining quantities differ according to the axial length of the helix taken, and are tabulated below.

TABLE IX.—Calculation of Mutual Induction.

Quantities	Values of Quantities.		
	For $M_{\odot}$.	For $M_{\odot_1}$.	For $M_{\odot_2}$.
x	$6{\cdot}350_6$	$6{\cdot}632_8$	$19{\cdot}334_0$
k^2	0·8932480	0·8889178	0·6188676
k	0·9451178	0·9428244	0·7866814
k'^2	0·1067520	0·1110822	0·3811324
k'	0·3267292	0·3332899	0·6173590
sin B	0·7252007	0·7109253	0·3838029
cos B	0·6885375	0·7032675	0·9234148
B	46° − 29′·1325	45° − 18′·6152	22° − 34′·167
F (k)	2·547390	2·528747	1·970492
E (k)	$1{\cdot}110253_4$	$1{\cdot}113718_3$	$1{\cdot}288108_6$
F (k', β)	0·8198800	0·7991096	0·3977745
E (k', β)	0·8029245	0·7826638	0·3901148
$\frac{k'^2 \sin\beta\cos\beta\,(\mathrm{F}-\mathrm{II})}{c}$	− 0·7037136	− 0·7224003	− 1·0735131
$\frac{c'^2}{c^2}(\mathrm{F}-\mathrm{II})$	− 0·7629102	− 0·7516717	− 0·4592672
$\frac{\mathrm{F}-\mathrm{E}}{k^2}$	1·6088889	1·5918560	1·1026320
Θ	90π	94π	274π
M	5859·722 × 4 23438·888	6063·486 × 2 12126·972	11292·649 × 2 22585·298

From the above table and formula (2), p. 509, the value of M_2-M_1 for the left suspended cylinder and the lower helices on the left-hand fixed cylinders can be obtained, viz. :—

$$= 12980{\cdot}562 \quad . \quad . \quad . \quad . \quad . \quad . \quad . \quad . \quad . \quad . \quad (18).$$

To determine the corresponding quantities for the remaining part of M_L and for those of M_R the quantities given in Table X. are required.

TABLE X.—Calculation of Increment Coefficients *q*, *r*, and *s* [Equations (3) and (17)].

Quantities.	Values of Quantities.		
	For $M_{\odot}$.	For $M_{\odot_1}$.	For $M_{\odot_2}$.
Π	15·373275	15·165695	9·691595
$\Pi c'$	3·642846	3·593424	2·296368
$F-\Pi c'$	− 1·095218	− 1·064677	−0·325876
$F+\Pi c'$	6·189998	6·122171	4·266860
Z	0·845979	0·840184	0·643365
$P_0(k)$	− 0·670387	− 0·654965	−0·234772
q	− 1·04931	− 1·027088	−0·410543
r	2·25687	2·247538	2·045630
s	− 0·20756	− 0·220449	−0·635087

Formula (3), p. 509, Section 9, may be written

$$dM_{\odot} = M_{\odot}\frac{q}{A}\,dA + M_{\odot}\frac{r}{a}\,da + M_{\odot}\frac{s}{x}\,dx \quad . \quad . \quad . \quad . \quad . \quad . \quad . \quad (19),$$

and making use of the values of M, *q*, *r*, and *s*, from Tables IX. and X., we get

$$\left.\begin{aligned} dM_{\odot}' &= -1490{\cdot}5\,dA + 5196{\cdot}7\,da - 766{\cdot}0\,dx \\ dM_{\odot_1}' &= -754{\cdot}8\,dA + 2677{\cdot}6\,da - 403{\cdot}0\,dx \\ dM_{\odot_2}' &= -561{\cdot}9\,dA + 4538{\cdot}7\,da - 741{\cdot}8\,dx \end{aligned}\right\} \quad . \quad . \quad . \quad . \quad (20),$$

where

$$M_{\odot}' = 4M_{\odot}, \qquad M_{\odot_1}' = 2M_{\odot_1}, \qquad M_{\odot_2}' = 2M_{\odot_2},$$

and dA, da, and dx are increments of A, a, and x respectively.

In cases where dA, da, and dx, are the same for all the windings involved in one value of M_2-M_1, the equations (20) may be combined, thus giving

$$d(M_2-M_1) = -1683{\cdot}4\,dA + 3335{\cdot}6\,da - 427{\cdot}2\,dx \quad . \quad . \quad . \quad . \quad (21).$$

For the helix GH (fig. 21) and current sheet $a_1a'_1$ we have

$$dA = -0{\cdot}00053, \qquad da = 0, \qquad dx = 0,$$

$$d(M_2-M_1) = +1683{\cdot}4 \times 53 \times 10^{-5} = 0{\cdot}892.$$

Denoting by $(M_2'-M_1')$ the new value of (M_2-M_1), we get

$$(M_2'-M_1') = (M_2-M_1)+0{\cdot}892 = 12980{\cdot}562+0{\cdot}892$$
$$= 12981{\cdot}454,$$

and therefore

$$M_L = (M_2-M_1)+(M_2'-M_1')$$
$$= 25962{\cdot}016 \quad \ldots \quad (22).$$

For the right-hand set of coils the increments are

$$dA'' = 0{\cdot}00111, \qquad dA''' = 0{\cdot}00052,$$

for the lower and upper fixed coils respectively, and for the current sheet a_2a_2',

$$da = 0{\cdot}00027.$$

Hence

$$(M_2''-M_1'') = 12979{\cdot}728, \qquad (M_2'''-M_1''') = 12980{\cdot}726,$$

therefore

$$M_R = (M_2''-M_1'')+(M_2'''-M_1''')$$
$$= 25960{\cdot}454 \quad \ldots \quad (23),$$

and

$$M_L+M_R = 51922{\cdot}47 \quad \ldots \quad (24).$$

The values obtained by the calculating machine were as follows :—

$$M_L = 25962{\cdot}04 \quad \ldots \quad (22'),$$

$$M_R = 25960{\cdot}43 \quad \ldots \quad (23'),$$

and

$$M_L+M_R = 51922{\cdot}47 \quad \ldots \quad (24').$$

Thus the two methods give the same result for the sum M_L+M_R, although the constituent values differ by nearly 1 in 1,000,000. It should, however, be pointed out that one of us calculated the mutual inductions from the arithmetical mean dimensions of the helices concerned, and the other from the calibrated mean dimensions as obtained from the curves shown in figs. 13, 14, 15, and 16. The agreement is, nevertheless, very close.

Mr. G. F. C. SEARLE has calculated the force between the current in one set of fixed coils and that in the suspended coils of the system not coaxial with it. The distance between the axes of the coils is a most important factor in the calculation, the accuracy of the calculation being approximately that with which the 5th power of this distance is known. The distance was determined as 50·8 centims. approximately, and for a current of 1·018 amperes a balancing mass of $0{\cdot}0427_5$ gramme was calculated by Mr. SEARLE's formula. In practice the balancing mass for this current is 0·0424 gramme. The agreement is satisfactory.

SECTION 11.—DIFFERENTIAL EFFECTS OF THE SEVERAL WINDINGS, AND THEIR RELATION TO THE LINEAR DIMENSIONS OF THE COILS.

On each fixed cylinder there are four helices, and on each suspended cylinder two helices, and the diametral dimensions of those on the same cylinder are slightly different. Let the upper helices on the left fixed cylinder be designated U1 and U2 respectively, the lower ones L1 and L2, and those on the coaxial suspended cylinder a and b; also let the helices on the cylinders to the right be represented by similar letters characterised with a dash. Then the maximum force due to a current γ_h in the left fixed helices and a current γ' per unit length in the current sheets equivalent to the suspended helices may be written

$$\gamma'\gamma_h(M_{U1a}+M_{U2a}+M_{L1a}+M_{L2a}+M_{U1b}+M_{U2b}+M_{L1b}+M_{L2b}) = 2\gamma'\gamma_h M_L = D_L \text{ (say)},$$

where M_{U1a} is the difference in mutual induction of the coil U1 and the circular ends of a (*i.e.*, M_2-M_1 of formula (1), p. 507), and M_L is the difference in mutual induction of all the fixed left helices and the circular ends of the current sheet equivalent to a and b. For the system on the right there is a similar expression which may be denoted by D_R, and the sum D_L+D_R is conveniently written as D.

In addition, there are secondary forces due to the mutual action of the fixed systems and the opposite suspended ones. The maximum secondary effect due to the left fixed system and the right suspended one may be written S_L, and that due to the other systems S_R. Let $S_L+S_R = S$.

The direct and secondary forces may aid one another, in which case the total force measured by the balance is $D+S$, or they may oppose one another, the force thus becoming $D-S$. The sum $(D+S)+(D-S)$ gives 2D. If only one-half of the whole system is used, D_L or D_R is obtained. In the determination of the E.M.F. of the cadmium cell, the forces $D+S$ and $D-S$ were measured in most cases.

Estimation of Difference between Left-hand and Right-hand Systems of Coils.—If the two forces D_L and D_R act in opposition on the beam of the balance, the force required to maintain equilibrium is $(D_L-D_R)+(S_L-S_R)$ or $(D_L-D_R)-(S_L-S_R)$. By reversing the current through all the coils on one side of the balance, one of these states is obtained from the other. If both of the balancing forces are measured, the mean is D_L-D_R, which is equal to $2\gamma'\gamma_h(M_L-M_R)$. Thus the mean balancing mass is $2\gamma'\gamma_h(M_L-M_R)/g$, and is to be accompanied by a positive sign when the force acting on it is in the same direction as D_L, and by a negative sign when in opposition to D_L. If m_1 is the balancing mass, $M_L-M_R = m_1 g/2\gamma'\gamma_h$; a check is thus afforded on the calculated difference M_L-M_R. The calculated value of M_L is 25962·04 centims. (see (22′), p. 514), and of M_R 25960·43 centims., the difference being 1·61 centims. The mass m_1 was determined on five different dates, and on each occasion the current was reversed through all the fixed coils in order to reverse the direction of the force and thus secure greater accuracy. The values of $2m_1$ obtained on these occasions are as follows:—$0{\cdot}5_5$ and $0{\cdot}4_5$ milligramme; $0{\cdot}4$ and $0{\cdot}3_5$ milligramme; $0{\cdot}5$ and $0{\cdot}5$ milligramme; $0{\cdot}3_5$ and $0{\cdot}4$ milligramme; and $0{\cdot}4$ and $0{\cdot}3$ milligramme, the sign being such as to indicate that M_L was the greater. The mean value of m_1 is 0·21 milligramme, and the probable error of this value is about 10 per cent. A current of 1·02 amperes was used, so that $2\gamma' = 0{\cdot}102 \times 14{\cdot}1724$ and $\gamma_h = 0{\cdot}102$. Hence the experimental value of $M_L - M_R$ is $0{\cdot}00021g/0{\cdot}147 = +1{\cdot}40$ centims., and is subject to a probable error of about 10 per cent. The agreement with those independently calculated by T. M. and F. E. S. from the dimensions of the coils (1·56 centims. and 1·61 centims.) is remarkably good.

Estimation of the Difference in the Diameters of the Coils on the Fixed Cylinders.—Suppose the current in U1 is in opposite direction to that in U2, those in L1 and L2 to be in opposite directions to each other, and that the currents in the suspended coils a and b are co-directional. Let the system on the right be inoperative. Then the force is

$$\gamma'\gamma_h\,[M_{U1a} + M_{U1b} - (M_{U2a} + M_{U2b}) \pm \{M_{L1a} + M_{L1b} - (M_{L2a} + M_{L2b})\}],$$

where γ' and γ_h have the same meanings as before. Here $M_{U1a} - M_{U2a}$ and $M_{U1b} - M_{U2b}$ are very small and practically equal; similarly $M_{L1a} - M_{L2a}$ is equal to $M_{L1b} - M_{L2b}$ very nearly. Hence the force may be written $2\gamma'\gamma_h\{(M_{U1a} - M_{U2a}) \pm (M_{L1a} - M_{L2a})\}$. By trial this may be made a maximum. If we assume M_{U1a} to be greater than M_{U2a}, and M_{L1a} to be greater than M_{L2a}, the maximum force is

$$2\gamma'\gamma_h\{(M_{U1a} + M_{L1a}) - (M_{U2a} + M_{L2a})\}.$$

The difference of the mean diameters of the separate helices on the upper and lower portions of the fixed cylinders was measured as 3μ for the coils on the left and as 2μ for those on the right (p. 488). For a mean difference in radius of $1{\cdot}2\mu$, the value of the force for one system, as calculated by the last equation, is 0·02 dyne, and on reversal of the current through the fixed coils the necessary change in the balancing mass to maintain equilibrium should be 0·04 milligramme. If the left and right systems be made co-operative in their effect, the change in the balancing mass will be twice this, *i.e.*, very nearly 0·1 milligramme. In experiments made to check this value, all the possible combinations of the coils on the fixed cylinders were made, subject only to the condition that the currents were in opposite directions in adjacent helices. Some small displacement of the resting point of the balance was invariably recorded on reversing the current in the fixed coils, but the change was exceedingly small and not always in the same direction. The mean of the first five observations is 0·0 milligramme as the balancing mass, and the mean of the first ten observations is 0·1 milligramme, results which are of little value except to show that the difference in diameter of the helices on the fixed cylinders is very small.

Estimation of the Difference in the Diameters of the Coils on the Suspended Cylinders.—When the currents in the a and b wires on the left suspended cylinder are in opposition, the maximum force due to the current in the left fixed helices is

$$\gamma'\gamma_h\{(M_{U1a}+M_{U2a}+M_{L1a}+M_{L2a})-(M_{U1b}+M_{U2b}+M_{L1b}+M_{L2b})\}.$$

The difference of the mean diameters of the helices on the left suspended cylinder was measured as 3μ and the difference of those on the right as 2μ. For a mean difference in radius of $1{\cdot}2\mu$ the value of the force for one system is 0·06 dyne. If the left and right systems are made to co-operate, the necessary change in mass to maintain equilibrium when a current of 1·02 amperes is passed through all the coils and reversed in the fixed coils should be 0·25 milligramme. The experimental value is $0{\cdot}3_5 \pm 0{\cdot}1$ milligramme, corresponding to a difference in the mean diameters of $3{\cdot}5\mu \pm 1\mu$.

Change of Relative Azimuth of Fixed and Suspended Cylinders.—Lord RAYLEIGH has pointed out* that the value of the mutual induction of two coaxial helices is dependent on the relative position of the helices, and that in strictness both helices cannot be replaced by current sheets. The complication thence arising can be eliminated in experimental applications by a relative rotation, since the mean field is strictly symmetrical, and accordingly the mean mutual induction is the same as if both helices were replaced by current sheets.

The fixed and suspended coils of the ampere balance are normally arranged, so that the diametral plane containing the termini of the fixed coils on one cylinder is practically coincident with that containing the termini of the coaxial suspended coils. The mutual induction must be slightly different when these planes are at right angles, and attempts were made to estimate this difference by experiment. The difference of the forces exerted by the left and right systems was first determined in the manner indicated on p. 515. One set of fixed coils was then turned through 90° and the difference again measured; there was no certain change in the difference, and had the change in mutual induction been as great as 5 in 1,000,000 it must have been detected. The fixed coils of the other system were then turned through 90° and the difference in mutual induction of the two systems again determined; it agreed with the previous results. The angle was altered to 60° and a few more measurements made, but no change in the difference was observed. The complete set of observations lead us to conclude that the mutual induction of the helices does not vary with change in the orientation of the coils by more than 1 in 1,000,000.

SECTION 12.—USE OF BALANCE AND DETERMINATION OF E.M.F. OF CADMIUM CELL.

The arrangement of the circuits employed in the determination of current strength and of the E.M.F. of the standard cell is shown diagrammatically in fig. 22, and in further detail in fig. 23. Fig. 24 gives a general view of the apparatus as used.

---

* 'B.A. Report,' 1899, p. 292 (Report of Electrical Standards Committee).

The current, whose value is to be determined by the current weigher, is passed through a standard resistance R (figs. 22, 23) and adjusted in strength until the P.D. between the terminals of R balances the E.M.F. of the cell S. A double commutator C, fig. 23, with copper contacts to reduce thermal E.M.F.'s, reverses the current in the standard resistance R and simultaneously reverses the connections to the standard cell S. The standard resistance is described on p. 520; it is provided with current and potential leads and is immersed in a tank of insulating oil. To

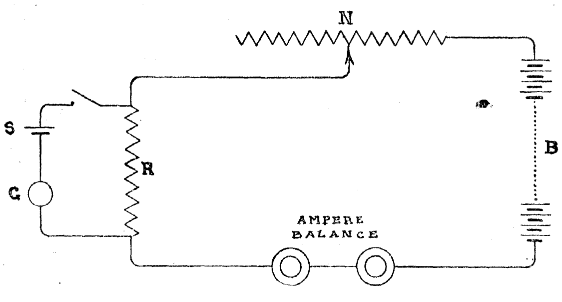

Fig. 22. Diagram of circuit.

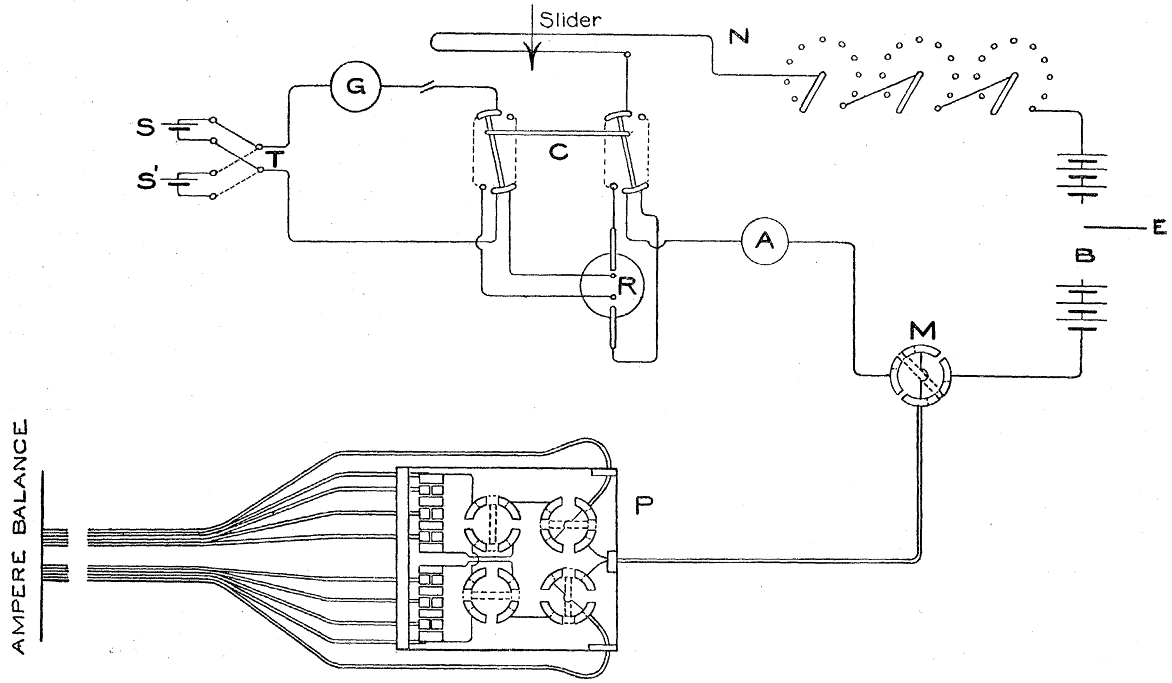

Fig. 23. Detailed diagram of circuit.

A represents an ammeter.
B ” a battery.
C ” a double commutator.
E ” an earthed point of battery.
G ” a galvanometer.
M ” a main commutator.

N represents a variable resistance.
P ” a multiple commutator and plug board.
R ” a standard resistance.
S and S′ represent standard cells.
T represents a turning head for enabling either S or S′ to be used.

avoid possible electromagnetic disturbances the oil was not stirred by a motor-driven turbine, but by a stream of air forced through it. In a few of the earlier determinations the standard cell was kept in the room containing the remainder of the apparatus; considerable variations in temperature were, however, experienced, and as there was evidence of a slight lag in the E.M.F. of the cell it was removed to a constant-temperature room in the basement. S′, fig. 23, is a second standard cell for the preliminary adjustment of the current, and the turning head T readily allows of either cell being inserted in the potentiometer circuit. B is a battery of 55 accumulators of 30 ampere hours' capacity; it is earthed at one point to eliminate electrostatic effects (see p. 525). The resistance of the circuit can be adjusted by means of a set of manganin coils and a mercury trough in N; in all there are ten 10-ohm coils,

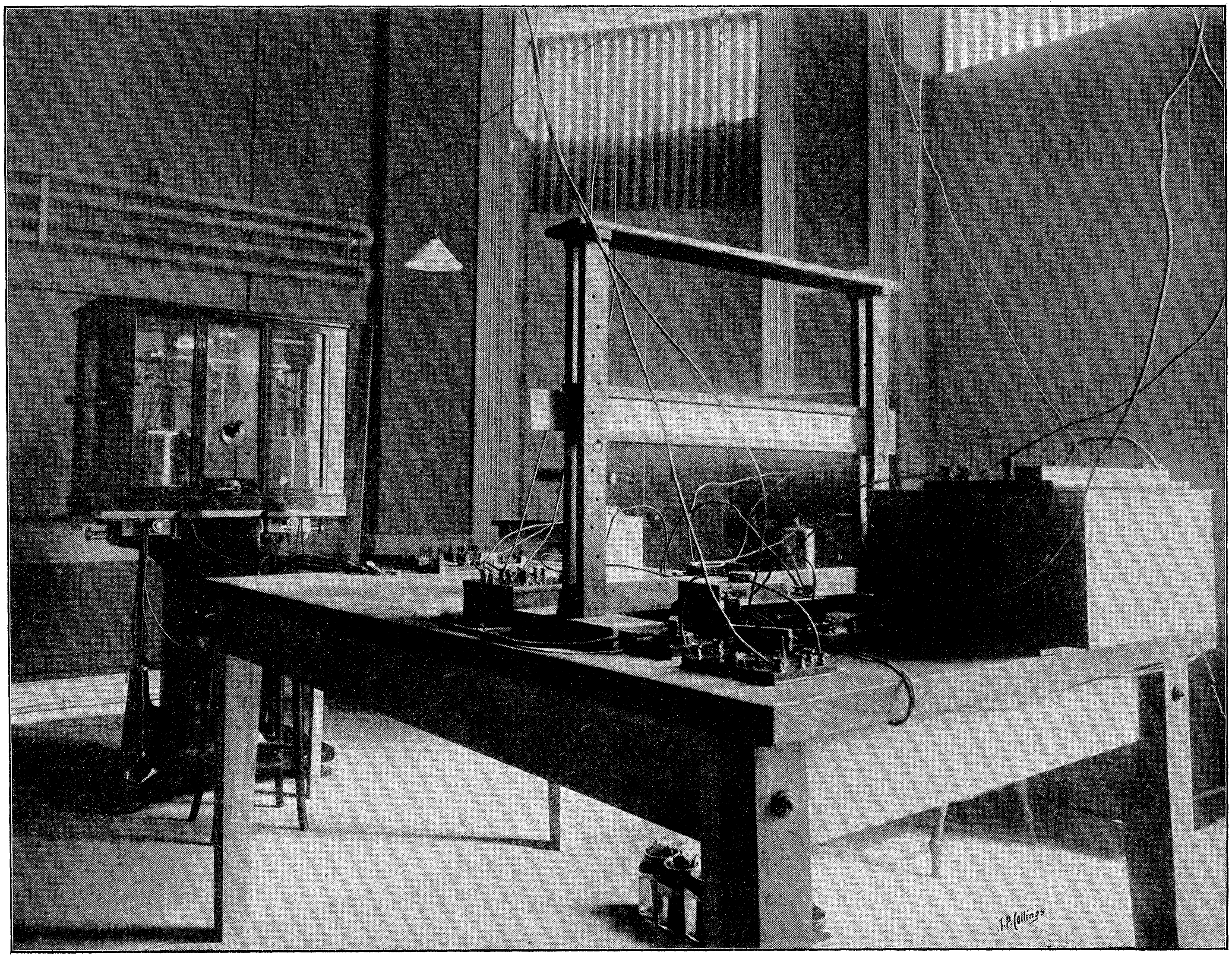

Fig. 24. General view of apparatus.

ten 1-ohm coils, and ten 0·1-ohm coils in series with a mercury trough of resistance 0·12 ohm; a sliding short-circuiting contact provides the final adjustment, a movement of 3 millims. of the slider corresponding to a change in current of 1 in 100,000. The manganin coils are wound on long brass tubes and are immersed in paraffin oil, the capacity of the tank being 6 gallons; a very constant current was in this way ensured. Under favourable conditions, *i.e.*, when manganin formed by far the greater part of the resistance of the circuit, a current constant to 2 in 1,000,000 could be maintained for an hour or more; when the coils of the balance were in circuit a current steady to about the same limit could be held for a few minutes only. This, however, is all that was desired.

The potential circuit included the resistance coil R, the cadmium cell S, a contact key, and a galvanometer G. The galvanometer was of the Broca type, having a resistance of 1000 ohms. The controlling field was varied from time to time and hence the sensitiveness was not the same in all of the determinations; in general a deflection of 5 millims. on the scale (1·5 metres distant) corresponded to a change of one-hundred-thousandth of an ampere in the main current. The galvanometer, commutators and all of the auxiliary apparatus belonging to the balance were made by Mr. MURFITT, the instrument maker attached to the National Physical Laboratory. Much of the fitting was also very ably done by Mr. MURFITT.

The Resistance Coil R, fig. 23, used as a secondary standard (numbered L. 87), is made of thick manganin strip, wound non-inductively on six posts and insulated therefrom by silk ribbon and shellac. The coil was built and annealed by Mr. MELSOM in July, 1905, and its resistance changed very rapidly for many months afterwards; it is still rising in value. It is provided with potential points and can carry a current of 10 amperes without abnormal heating. In July, 1905, the coil was directly compared with the mercury standards of the National Physical Laboratory, and again in March, 1906; the intermediate and subsequent evaluations were made by comparing it with standard coils. The methods of comparison are described elsewhere.* The temperature coefficient was determined in 1905 and again in March, 1907; the mean coefficient for the range 10° C.–20° C. is +0·0019 per cent. per 1° C., but for the reduction of values to a common temperature a resistance chart was used. Owing to the rapid rise in resistance with time the coil was compared with practically constant standard manganin coils on each day a determination of current was made; the secular change in resistance was thus eliminated as a source of error in the comparison of results.

The Main Commutator (M, fig. 23) is formed of four brass quadrants of square section and an ebonite turning head carrying two springy copper contact pieces insulated from each other. Connection with the concentric cable is made by drilling two opposite quadrants, one aperture being $\frac{1}{4}$ inch in diameter and the

---

* "Methods of High Precision for the Comparison of Resistances," F. E. SMITH, 'B.A. Report,' Section A, 1906.

other $\frac{1}{8}$ inch. Thin brass tubes, projecting outwards for $\frac{1}{2}$ inch, are fitted into these holes and hard soldered to the quadrants. To the larger of these tubes the strands comprising the outer conductor of the concentric are soldered, and to the smaller the inner strands are similarly joined. Each quadrant is drilled centrally with a large tapering hole; by means of conical plugs connection with other circuits —for the measurement of insulation resistance, &c.—can thus be made. The two positions of this commutator are designated hereafter by the letters A and B.

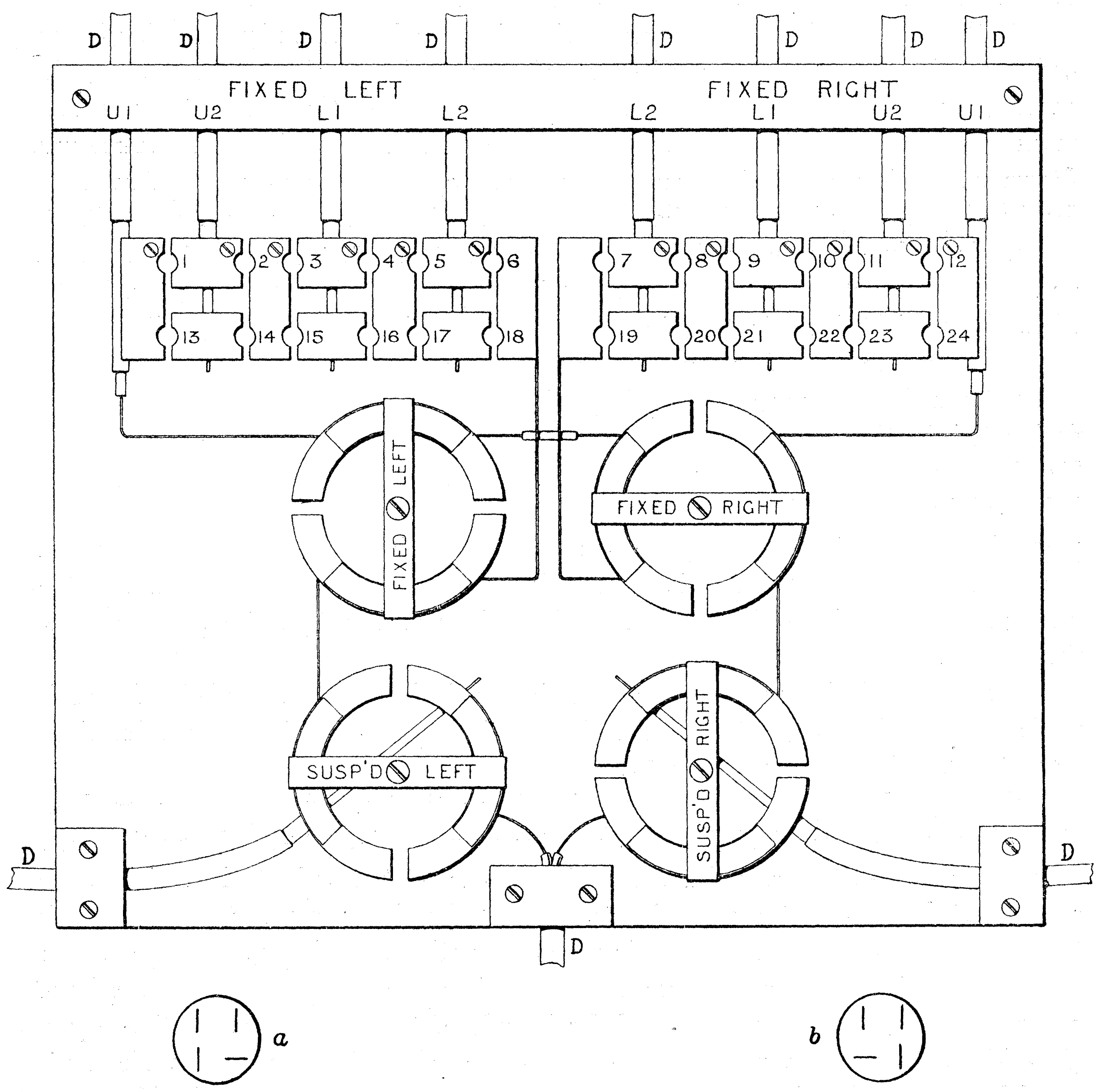

Fig. 25. Multiple commutator and plug board.

Multiple Commutator and Plug Board (P, fig. 23 and fig. 25).—This consists of four commutators, constructed in a similar manner to that already described, and a plug board divided into two sections for the left-hand and right-hand sets of coils respectively. A commutator allows of the reversal of the current in all the coils on any one cylinder, and the plug board allows of the reversal of the current in any one or more helices on the fixed cylinders. The inner and outer conductors of the concentric cables, D, fig. 25, are soldered to thin brass tubes let into brass blocks and pass to the various coils of the balance. Each helix is designated by a word, a letter, and a number, which are marked on an ebonite bridge at the top of fig. 25; the turning heads are also marked so as to enable reversals of the current to be quickly made without likelihood of error. Each plug hole is numbered, and a scheme was drawn up so that any desired combination was represented by a series of numbers for the plugs and by letters for the commutators. For example, in taking a (D+S) observation, plugs are inserted in the holes 13, 2, 3, 16, 5, 18, 19, 8, 21, 10, 11, 24, and the four commutators arranged in positions represented by the diagram *a*, fig. 25. Here the straight lines in the circle represent the directions of the turning heads of the commutators. When the main commutator M, fig. 23, is in the A position, and the multiple commutators as shown in *a*, fig. 25, the whole arrangement is designated by the symbols *a*A. Reversing the main commutator changes it to *a*B. Turning the commutators connected with the suspended cylinders to the positions indicated by diagram *b*, fig. 25, we get an arrangement symbolised by *b*B, and a reversal of the main commutator gives *b*A. Changing from *a*A to *b*B reverses the current in the fixed coils only, as also does the change *b*B to *a*A. In fig. 25 the letters DD, &c., indicate the ten concentric cables running from the plug board to the balance.

The reversal of the current in one of the two helices on a suspended cylinder is made by a small commutator on the three-limbed spider. This has been described on p. 500, and is illustrated in fig. 17.

Balancing Masses.—The weights employed are eight in number and are made of aluminium. They are divided into two sets: four for the (D+S) observations and four for the (D−S) observations, and the masses of the weights in each set are approximately equal. The force due to one (D+S) weight very nearly balances half the total force due to the current in such observations, and it may be employed for observations of the maximum force when the current flows through all the coils of one system and through the suspended coils only of the other system. Similarly, a (D−S) weight may be used for observations of the minimum force under such conditions. For the (D+S) observations two weights are used on each side of the balance, similarly for the (D−S) observations, and the total mass of the eight weights is required for the calculations. The masses of different combinations were, however, also determined. The standard mass employed was a 100-gramme weight standardised at Sèvres, and the effective mass of the eight weights in a medium of density 0·001196 was determined as 31·12494 grammes, the four (D+S) weights being 15·73135 grammes and the four (D−S) weights being 15·39359 grammes. Aluminium is not a very desirable material for weights, owing to its density being so small, but in our experiments the effective mass of the weights never varied by so much as 8 in 1,000,000 from the mean, and if no correction had been made for variable air displacement, the error in the measurement of the current would never have exceeded 4 in 1,000,000. Of course, the corrections were applied. The probable error of the effective mass is of the order 1 in 1,000,000.

Preliminary Difficulties.

(A) *Defects in Flexible Concentric Cable.*—The cable originally used consisted of an inner conductor of 30 copper wires of diameter 0·0048 inch and an outer tubular conductor of 74 strands of the same diameter. After connecting the balance coils to the multiple commutator and plug board the cable was found to be faulty, and subsequent examination showed that many of the internal strands were broken. The cable was therefore replaced by a concentric one having an inner conductor of three copper wires of diameter 0·022 inch, and an outer tubular conductor of sixteen, of diameter 0·0148 inch. This proved to be entirely satisfactory.

(B) *Unsteady Current and Convection Currents of Air Produced by the Heating of the Flexible Leads.*—Originally the current was led into and out of each pair of suspended coils by two silver-gilt strips, each 13 centims. long, 0·37 millim. broad, 0·035 millim. deep, and of 0·15 ohm resistance. In each pair of silver strips there was 1 calorie of heat produced every 14 seconds when a current of 1 ampere passed through them, and the maximum increase in temperature of the strips was about 20° C. The temperature coefficient of electric resistance of silver is 0·36 per cent., hence the increase in resistance of the four strips was 0·04 ohm, and a fluctuation in temperature of 1° C. corresponded to a change in resistance of the circuit (110 ohms) of 0·002 ohm. Such a change in temperature frequently resulted, as was proved by including the silver strips in a circuit containing 110 ohms of manganin; with a current of 1 ampere the fluctuations in current were of the order 5 in 1,000,000. When the strips were removed from the circuit, the corresponding changes were 1 in 1,000,000.

The energy of motion of the air particles in the immediate neighbourhood of each pair of strips was increased at the rate of about 3×10^6 ergs per second. The effect of the convection currents of air thus produced was tested by passing a current of 1 ampere through one pair of the strips inside the balance case when the balance coils were not included in the circuit. After the circuit had been completed for 5 minutes the resting point of the balance changed by an amount equivalent to an added load of 9 milligrammes on that side of the balance with the heated strips; after 10 minutes the change corresponded to 24 milligrammes; 15 minutes afterwards to 39 milligrammes, after which the resting point of the balance was approximately constant. The circuit was broken for 15 seconds and the change noted; it corresponded to 0·4 milligramme; equilibrium was restored after 5 minutes. The length of one arm of the balance is 25·4 centims., and the "equivalent arm" of each pair of strips is about 15 centims.; hence the maximum downward force on the strips was 65 dynes, equal to that produced by 66 milligrammes. It is interesting to note that the mass of the two strips was less than this—being only 36 milligrammes. The elasticity of silver changes with temperature and the control exercised by the strips must in consequence have varied with it; calculation shows, however, that the effect was negligible.

To remedy these defects, each of the four strips was replaced by 80 silver wires 1 mil (0·0025 centim.) in diameter. The surface per centimetre length of the strip was 0·80 sq. millim. and the section of the strip 0·013 sq. millim.; the corresponding values for the 80 strands are 6·0 sq. millims. and 0·04 sq. millim. The length of each strand is 10·5 centims., and the resistance of the 80 is about 0·037 ohm; the heating effect is, therefore, one-quarter of that formerly experienced, and the radiating surface over seven times as great. The sensitiveness of the balance is greater than when the strips were used, and the current through the fine wires can be kept very constant. In addition there is no drift in the resting point of the balance due to convection currents of air rising from the silver wires. Fusion of the silver did not result when a current of 0·7 ampere was passed through one strand.

(C) *Heating Effect of Current in Balance Coils.*—The total resistance of the fixed and suspended coils is 71 ohms at 17° C. With a current of 1 ampere the heating effect is considerable and the resistance of the coils changes comparatively rapidly. The following table (XI.) gives the resistance of the balance coils and estimated temperatures when currents of 0·70 and 1·02 amperes respectively pass through the coils until the latter are in a steady thermal state. In each case the circuit was completed for 24 hours.

TABLE XI.

Coils.	No current.		0·7 ampere.		1·02 amperes.	
	Resistance in ohms.	Temperature.	Resistance in ohms.	Temperature.	Resistance in ohms.	Temperature.
		° C.		° C.		° C.
On left fixed cylinder . . .	26·641	17·35	27·506	25·4	28·103	30·4
„ right „ „ . . .	26·647	17·35	27·528	25·4	28·120	30·4
„ left suspended cylinder .	8·710	17·35	9·077	27·4	9·354	34·5
„ right „ „ .	8·730	17·35	9·110	27·7	9·375	34·5
Temperature of balance case .	—	17·35	—	22·0	—	24·2

Afterwards the balance case was covered with blankets and similar observations made with a current of 1 ampere. The maximum increase in temperature was 22° C., the temperature of the air within the balance case being 12° C. lower than that of the suspended coils.

An idea of the effect of the convection currents of air rising from the fixed and suspended coils was obtained from observations on the balance pointer when the forces acting on the suspended systems were in opposition. In such a case small variations in current strength have no measurable effect on the total force. With the balance case covered with blankets and practically uniform radiation in all directions (the observations were made at midnight), the mean doubled rest-point of the balance pointer was deduced from 108 readings as 206·7. These readings were taken in three sets. The first set of 36 readings gave 206·2 as the rest-point; the second set were taken immediately after the first and gave 205·9; there was an interval of half an hour between the second and third sets, the mean of the latter being 208·0. The average difference between the first 36 readings and 206·2 is 0·8, so that the mean of a few readings is associated with a large probable error. In addition there was difficulty in maintaining a very steady current through the heated coils; the rest-point of the balance was subject to drift; and the difference of temperature between the coils and marble and between fixed and suspended coils introduces serious difficulties in the calculation of the mutual induction.

The rest-point of the balance is very constant when no current is flowing through the coils and has not passed for some hours previously; it is also very constant for the first 20 minutes after the circuit has been completed. The resistance of the coils increases considerably in this period, but observations proved that a current constant to 2 in 1,000,000 and often to 1 in 1,000,000 could be maintained for four minutes, in which interval the resistance of the balance coils increases about 0·12 ohm, and the sliding contact of the mercury trough passes from the most to the least favourable position for adjustment. In this interval three readings of the balance pointer could always be taken, and experience has shown such readings to be remarkably accurate. This method was adopted.

(D) *Electrostatic Effects.*—Electrostatic effects of sufficient magnitude to produce a readable deflection of the balance pointer were not anticipated. The mean electrostatic potentials of the various pairs of coils are, of course, different, but the maximum variation between any part of one suspended and any part of one fixed system is less than 36 volts when a current of 1 ampere is flowing. A test was made by connecting the upper coils of one fixed system and the lower coils of the other fixed system to the + pole of a battery of 110 volts; the other coils of the balance were connected to the − pole and to earth. No difference was observed in the rest-point of the balance, and hence there could be no disturbing effect due to electrostatic attraction between the fixed and suspended coils. When, however, the balance coils were placed in series and a current of 1 ampere passed through them, a difference in the rest-point of 0·7 scale-division was always observed on reversing the current; this was found to be a measure of the difference of the electrostatic forces between the suspended coils and the metal guard-discs *d*, fig. 6 (Plate 8), underneath them. The difference of mean potential of the coils on the suspended systems is 62 volts; the metal rings are about

3 millims. distant from the bases of the cylinders and are practically earth-connected. If the mean potentials of the suspended systems were +31 volts and −31 volts respectively, relatively to the earth, then the total electrostatic effect should be *nil.* The resistance of the whole circuit was 110 ohms, that of the balance 71 ohms, and the E.M.F. of the battery was 110 volts. By earthing the battery between the 19th and 20th cells, counting from that end directly connected to the balance coils, the potentials were approximately as indicated and there was no measurable effect on the balance when the current was reversed. Except for the first few observations the battery was earthed at this point. No error was introduced by the omission, as the electrostatic effect occurs twice with opposite signs in the observations.

Normal Procedure.—In making a determination of the strength of a current, the following scheme was adopted:—

(1) The commutators and plugs were set so that the current circulated through the balance coils in the order: suspended left, fixed left, fixed right, and suspended right, and so that the total force was the sum of the direct and secondary forces (D+S) (see p. 508). Observations for the determination of the balancing mass were then made and repeated when

(2) the current through the fixed coils was reversed;

(3) the current through the whole of the balance circuit as typified by (2) was reversed;

(4) the current through the fixed coils was reversed, that in the suspended coils being as in (3);

(5) the current through the whole of the balance circuit as typified by (4) was reversed.

Each of these arrangements is indicated by two letters, one denoting the position of the main commutator M, fig. 23, and the other that of the commutators on the multiple commutator and plug board P, as described on p. 522. After these observations a similar set was made when the direct and secondary forces opposed one another, thus determining (D−S). The order of making the observations in each set was rigidly adhered to, but the (D−S) observations sometimes preceded and sometimes followed the (D+S) observations.

After the first few determinations of E.M.F. had been made, the current which it would be necessary to pass through the circuit to balance the cadmium cell was estimated from the secular change in resistance and the temperatures of the coil and cell; the balancing mass was then calculated and the position of the rider decided on, so as to give, together with the weights, the required mass. Previous to observations of any kind being made, the circuit through the manganin coils was completed for an hour or more, after which an examination of the steadiness of the current was made by one of us, and observations of the sensitiveness of the balance and stability of the rest-point of same were made by another. In accordance with the scheme on p. 522, the multiple commutator was appropriately set, the balancing weights placed in position, and, at a given signal, the balance coils were included in the circuit. The resistance in N, fig. 23, was rapidly adjusted until (1) the ammeter reading appeared to be the same as before, (2) balance was obtained when S′ was in the potentiometer circuit, and (3) the fulfilment of the latter condition when S was substituted for S′. In general, these adjustments occupied about 10 seconds. When condition (2) held, a signal was made to the balance operator, and the beam of the balance was freed. The average duration of a complete set of observations was 20 minutes, and during this time the balance coils were included in the circuit for about 12 minutes.

General Behaviour of the Balance.—After eliminating the difficulties mentioned on pp. 523–526, the working of the balance, when cold, was most satisfactory. Under normal conditions the constancy of the rest-point of the balance is well within 0·1 scale division when no current passes through the coils, and the sensitiveness is about 8 divisions for 10 milligrammes. When a current passes through the coils for not more than 20 minutes the same constancy is in general maintained, and if the balance circuit is occasionally broken—as it is in experiments for the determination of current—this interval of constancy is prolonged to 30 minutes or more. If the current through the balance coils is maintained after this interval, approximating to 30 minutes, the balance becomes unsteady, and no very accurate observations can be made; if, however, the circuit is broken after the interval, the balance reading remains approximately constant, variations of the order of 0·2 scale division only being observed. At the end of three or four hours another determination of current is possible, with practically the same degree of accuracy as before, but soon after these observations the balance becomes unsteady, and shows variations in the rest-point, gradually increasing from 0·1 to 1·0 scale division. If the second set of observations are made within one or two hours of the first set, the balance reading is not constant, and the results obtained are not of a high order of accuracy. In general, therefore, only two determinations of current are possible within six hours, but these are associated with a very small observational error. One determination normally occupies from 16 to 25 minutes.

Our usual procedure was to make one complete set of observations in the morning and another in the afternoon, after the balance had been cooling for several hours. Attempts made on several days to make a third set were never successful.

The time which elapsed between morning and afternoon observations of E.M.F. was usually devoted to silver-deposit determinations, the standard cell S and resistance R, fig. 23, being used for keeping the current steady at a calculable value during the deposition. In effect, therefore, the combination of cell and coil, forming a secondary standard of current, was standardised morning and afternoon by the balance, and used in the interval for measuring the current through the voltameters. As, however, the determination of the electro-chemical equivalent of silver forms the subject of another paper, it need not be discussed here.

Below is a sample series of readings taken in the second determination on Jan. 2, 1906:—

January 2, 1906.

(1) Observations for constancy of resting point and of sensitiveness:—

Constancy:—

$99\cdot 5$	$100\cdot 8_5$	$200\cdot 3_0$	$99\cdot 6_5$	$100\cdot 6$	$200\cdot 2_8$
$99\cdot 5$	$100\cdot 8$		$99\cdot 7$	$100\cdot 6$	
$99\cdot 4_5$			$99\cdot 7$		

The second set of observations was made 10 minutes after the first set.

Sensitiveness:—

10 milligrammes on left.			10 milligrammes on right.		
$100\cdot 7_5$	$107\cdot 3$	$208\cdot 0_5$	$90\cdot 5$	$102\cdot 0_5$	$192\cdot 6$
$100\cdot 8$	$107\cdot 2$		$90\cdot 6_5$	$102\cdot 0$	
$100\cdot 8_5$				$101\cdot 9_5$	

Sensitiveness $= 0\cdot 77$ division for 1 milligramme.

(2) Determination of current:—

	Cell.	Coil.	Case.	Barometer.
	°C.	°C.	°C.	centims.
Temperatures at commencement of observations . . .	16·71	16·70	14·0	74·5
,, ,, conclusion ,, ,, . . .	16·71	16·78	14·2	

(D − S).

Position of rider, − 0·0060.

Commutator positions.				Weights on
*a*A	$99\cdot 8_5$ $99\cdot 8_5$	$101\cdot 0_5$	$200\cdot 9$	L
*b*B	$98\cdot 7$ $98\cdot 7_5$	$101\cdot 9_5$	$200\cdot 6_7$	R
*b*A	$98\cdot 4_5$ $98\cdot 4_5$	$102\cdot 1$	$200\cdot 5_5$	R
*a*B	$100\cdot 0$ $100\cdot 0$	$100\cdot 9_5$	$200\cdot 9_5$	L
*a*A	$99\cdot 1$ $99\cdot 1$	$101\cdot 7_5$	$200\cdot 8_5$	L

Mean "*a*" reading $= 200\cdot 9_0$ ⎫ difference
,, "*b*" ,, $= 200\cdot 6_1$ ⎭ $= 0\cdot 2_9$

Effective mass of weights $= 15\cdot 3935_9 - 0\cdot 0000_5$

Balancing mass $= 15\cdot 3935_4 - 0\cdot 0120$
$- 0\cdot 0004$
$= 15\cdot 3811_4$

(D + S).

Position of rider, − 0·0050.

Commutator positions.				Weights on
*a*A	$98\cdot 0$ $98\cdot 0$	$101\cdot 6$	$199\cdot 6$	R
*b*B	$99\cdot 9_5$ $99\cdot 9_5$	$100\cdot 7$	$200\cdot 6_5$	L
*b*A	$99\cdot 9_5$	$100\cdot 6$ $100\cdot 5_5$	$200\cdot 5_2$	L
*a*B	$99\cdot 6_5$ $99\cdot 6_5$	$100\cdot 0_5$	$199\cdot 7$	R
*a*A	$99\cdot 2$ $99\cdot 2$	$100\cdot 4_5$	$199\cdot 6_5$	R

Mean "*a*" reading $= 199\cdot 6_5$ ⎫ difference
,, "*b*" ,, $= 200\cdot 5_9$ ⎭ $= 0\cdot 9_4$

Effective mass of weights $= 15\cdot 7313_5 - 0\cdot 0000_5$

Balancing mass $= 15\cdot 7313_0 - 0\cdot 0100$
$- 0\cdot 0012$
$= 15\cdot 7201_0$

Sum of balancing masses = 31·1012 grammes.

$$\text{Mean current} = \sqrt{31\cdot 1012}/\sqrt{4 \times 7\cdot 49964}^{*} = 1\cdot 01821_2 \text{ in amperes.}$$

---

* Formula (12), p. 510.

The "*a*" and "*b*" positions refer to the multiple commutator and plug board, fig. 25, and the "A" and "B" positions to the main commutator M, fig. 23, as explained on p. 522. A change from "*a*" to "*b*" reverses the current in the suspended coils, and a change from "A" to "B" reverses the current in all the coils of the balance. Centigramme riders were employed, and the position −0·0060 in the (D−S) experiment indicates that the rider and balancing weights were on opposite sides of the beam. The correction −0·0000$_5$ gramme is for the difference in density of the air from 0·001196. In all cases the sum of the balancing masses was computed to 0·1 milligramme.

TABLES OF RESULTS.

The following tables, XII. and XIII., give particulars of determinations from September, 1905, to April, 1907; no determination has been omitted, except when

TABLE XII.—(Cadmium Cell No. 2.) E.M.F. Determinations, using One Set of Coils.

Date.	Observation.	Balancing mass in grammes.	Mean temperature—		R = value of resistance coil in international ohms.	C = value of current.	C × R.	C × R corrected to 17° C.
			Of cell.	Of resistance coil.				
			° C.	° C.				
12.9.1905	D$_L$	7·7775	16·1	16·9	0·99988$_1$	1·01834	1·01822	1·01819
14.10	,,	7·7833	9·51	10·35	74$_9$	72	47	21
14.10	,,	30	9·71	10·69	75$_7$	70	46	19
23.10	,,	36	9·0	8·9	73$_5$	74$_0$	47$_0$	19$_6$
23.10	,,	12	11·64	11·45	79$_6$	58$_3$	37$_5$	16$_8$
24.10	,,	23	11·80	9·55	74$_8$	65$_5$	39$_8$	19$_8$
24.10	,,	24	10·50	11·29	79$_2$	66$_2$	45$_0$	21$_2$
							Mean . .	1·01819$_5$
30.9.1905	D$_R$	7·7797	13·8	14·75	0·99984$_3$	1·01852	1·01836	1·01822
14.10	,,	7·7836	9·63	10·53	75$_3$	77	52	26
23.10	,,	33	9·25	9·0	73$_7$	75$_1$	48$_3$	21$_3$
23.10	,,	11	11·60	11·15	79$_0$	60$_7$	39$_3$	18$_6$
24.10	,,	20	11·80	9·72	75$_2$	66$_6$	41$_3$	21$_3$
24.10	,,	20	10·31	11·12	78$_8$	66$_6$	45$_0$	20$_7$
Balancing masses for reversal of 1 ampere:— Left-hand coils $m_l = 7 \cdot 49987$ * Right-hand ,, $m_r = 7 \cdot 49942$							Mean . .	1·01821$_6$
							Mean of both sets =	1·01820$_5$

---

* Formulæ (7) and (8), p. 510.

TABLE XIII.—Cadmium Cell No. 2.

Date.	Observations.		Sum of masses $= m'$.	Mean temperature of cell.	Mean temperature of coil.	R = value of coil in international ohms.	C = value of current = $\sqrt{m'}/\sqrt{4m}$.*	C × R.	C × R corrected to 17° C.	Differences from mean (1×10^{-6}).
	D + S, balancing mass.	D − S, balancing mass.								
	grammes	grammes	grammes	° C.	° C.		amperes			
29.9.1905	15·7290	15·3887	31·1177	14·0	14·9	0·99983$_7$	1·01848$_1$	1·01831$_5$	1·01818$_2$	-1_5
29.9	302	894	196	14·3	15·0	83$_9$	51$_2$	34$_8$	22$_5$	$+2_8$
2.10	310	913	223	12·65	13·3	81$_5$	55$_9$	37$_0$	18$_9$	-0_8
3.10	330	928	258	11·6	12·3	79$_3$	61$_6$	40$_5$	19$_5$	-0_2
3.10	318	915	233	12·1	13·1	81$_0$	57$_4$	38$_0$	18$_4$	-1_3
4.10	323	913	236	12·3	12·9	80$_7$	57$_8$	38$_1$	19$_0$	-0_7
7.10	353	946	299	10·32	11·0	76$_6$	68$_3$	44$_5$	20$_2$	$+0_5$
7.10	342	935	277	10·95	12·0	78$_9$	64$_6$	43$_1$	19$_8$	$+0_1$
11.10	338	934	272	11·25	12·15	79$_5$	63$_7$	42$_8$	20$_3$	$+0_6$
11.10	338	935	273	11·03	12·55	80$_4$	63$_8$	43$_8$	20$_8$	$+1_1$
12.10	324	916	240	11·88	12·27	80$_0$	58$_5$	38$_1$	18$_0$	-1_7
13.10	323	924	247	11·66	12·62	80$_7$	59$_7$	40$_0$	19$_4$	-0_3
23.10	250	853	103	16·96	13·05	83$_3$	36$_0$	19$_0$	18$_9$	-0_8
24.10	228	833	061	17·10	17·00	90$_5$	29$_2$	19$_5$	19$_8$	$+0_1$
26.10	281	881	162	17·30	9·20	74$_1$	45$_7$	19$_3$	20$_4$	$+0_7$
26.10	257	855	112	17·50	11·52	79$_7$	37$_5$	16$_8$	18$_8$	-0_9
27.10	272	871	143	17·25	10·40	77$_2$	42$_6$	19$_4$	20$_4$	$+0_7$
28.10	271	869	140	16·79	10·60	77$_8$	42$_1$	19$_5$	18$_7$	-1_0
28.10	257	860	117	16·65	12·12	81$_4$	38$_3$	19$_3$	18$_0$	-1_7
2.11	238	837	075	17·25	13·95	88$_4$	31$_5$	19$_7$	20$_6$	$+0_9$
2.11	222	827	049	17·96	13·92	90$_1$	27$_2$	17$_1$	20$_4$	$+0_7$
3.11	226	831	057	18·23	13·95	88$_8$	28$_5$	17$_1$	21$_4$	$+1_7$
3.11	208	819	027	18·40	16·08	90$_8$	23$_6$	14$_3$	19$_1$	-0_6
4.11	232	842	074	17·00	13·83	88$_3$	31$_3$	19$_4$	19$_4$	-0_3
4.11	236	828	064	17·00	14·97	90$_4$	29$_7$	19$_9$	19$_9$	$+0_2$
6.11	262	864	126	16·59	10·30	81$_2$	39$_8$	20$_6$	19$_2$	-0_5
6.11	220	827	047	16·90	15·15	91$_7$	26$_9$	18$_5$	18$_2$	-1_5
8.11	239	843	082	16·00	14·99	91$_4$	32$_6$	23$_8$	20$_4$	$+0_7$
8.11	231	838	069	16·41	15·02	91$_4$	30$_5$	21$_7$	19$_7$	$+0_0$
8.11	217	829	046	16·80	15·52	92$_3$	26$_7$	18$_9$	18$_2$	-1_5
9.11	210	814	024	17·30	15·70	94$_1$	23$_4$	17$_1$	18$_1$	-1_6
9.11	210	818	028	17·35	15·47	93$_7$	23$_8$	17$_4$	18$_6$	-1_1

10.11	251	855	106	17·34	9·97	82_0	36_5	18_1	19_3	-0_4
11.11	235	837	072	16·61	12·70	90_1	31_0	20_9	19_5	-0_2
11.11	228	830	058	16·70	14·05	93_0	28_7	21_6	20_6	$+0_9$
13.11	247	849	096	16·33	11·52	87_5	34_9	22_1	19_8	$+0_1$
18.11	210	817	027	16·91	15·71	96_7	23_6	20_3	20_0	$+0_3$
18.11	217	813	030	16·99	15·86	97_0	24_1	21_1	21_1	$+1_4$
28.11	226	835	061	15·92	14·43	95_2	29_2	24_4	20_7	$+1_0$
2.12	220	830	050	16·92	12·81	92_2	27_4	19_4	19_1	-0_6
2.12	213	818	031	16·70	15·11	96_7	24_3	21_0	20_0	$+0_3$
6.12	219	830	049	17·30	12·50	91_5	27_2	18_5	19_5	-0_2
6.12	216	827	043	17·30	13·31	93_3	26_2	19_3	20_3	$+0_6$
16.12	230	836	066	16·80	11·97	90_4	30_0	20_2	19_5	-0_2
2.1.1906	216	822	038	16·35	15·12	97_4	25_4	22_8	20_6	$+0_9$
2.1	201	811	012	16·71	16·74	$1·00000_2$	21_2	21_4	20_4	$+0_7$
3.1	196	802	31·0998	16·87	17·20	01_7	18_8	20_5	20_1	$+0_4$
3.1	192	798	0990	17·01	18·21	02_3	17_5	19_8	19_8	$+0_1$
12.1	191	798	0989	16·90	18·77	04_2	17_4	21_6	21_3	$+1_6$
12.1	179	790	0969	17·11	19·92	05_8	15_1	20_9	21_2	$+1_5$
27.1	196	804	1000	16·90	16·81	01_1	19_2	20_3	20_0	$+0_3$
10.2	193	801	0994	16·98	16·30	0_4	18_2	18_6	18_6	-1_1
15.2	211	816	1027	17·25	13·59	$0·99996_0$	23_6	19_6	20_4	$+0_7$
17.2	187	797	0984	17·20	17·50	$1·00002_9$	16_6	19_5	20_2	$+0_5$
24.2	195	806	1001	17·06	16·70	1_6	19_3	20_9	21_1	$+1_4$
24.2	202	809	1011	17·02	15·60	$0·99999_7$	21_0	20_7	20_7	$+1_0$
3.3	182	791	0973	16·80	19·48	$1·00005_8$	14_7	20_6	19_9	$+0_2$
10.3	206	813	1019	17·12	14·32	$0·99997_1$	22_3	19_4	19_8	$+0_1$
17.3	198	805	1003	17·01	16·89	$1·00001_0$	19_7	20_7	20_7	$+1_0$
17.3	186	796	0982	17·07	19·19	4_6	16_2	20_8	21_0	$+1_3$
24.3	195	804	0999	16·67	16·67	1_5	19_0	20_5	19_2	-0_5
14.6	196	801	0997	17·29	15·51	0_2	18_7	18_9	19_9	$+0_2$
14.6	191	799	0990	17·29	15·92	0_9	17_5	18_4	19_4	-0_3
15.6	189	796	0985	17·02	16·40	1_8	16_7	18_5	18_6	-1_1
15.6	186	797	0983	17·09	16·72	2_3	16_4	18_7	19_0	-0_7
12.9	164	774	0938	17·10	18·30	10_9	09_0	20_1	20_4	$+0_7$
12.9	161	775	0936	17·15	18·59	11_3	08_7	20_2	19_8	$+0_1$
18.12	180	783	0963	16·10	15·21	9_0	13_1	22_3	19_3	-0_4
18.12	172	782	0954	16·12	15·89	10_1	11_6	21_9	18_9	-0_8
9.4.1907	165	775	0940	17·31	14·25	8_6	9_3	18_1	19_2	-0_5
10.4	157	765	0922	17·20	15·95	11_6	6_4	18_2	18_9	-0_8
71 observations								Mean =	$1·01819_7$	$\pm 0_6$

---

* Formula (12), p. 510.

the observations were of such a nature that a decision to disregard the result was arrived at before its computation. Such occasions were very rare.

Table XII. gives the results obtained when only one set of coils (left or right) was made use of, so that there were no secondary forces to be eliminated. They are inserted to show the order of the agreement attainable in this way, and are not considered to be so reliable as the values deduced from the (D+S) and (D−S) tests.

When both sets of coils are operative, the balancing mass for 1 ampere is 7·49964 grammes—this has been denoted by m in Table XIII.

PROBABLE ERRORS.

The mean error of a single observation in Table XIII., viz., 6 parts in 1,000,000, is surprisingly small, for this comprises the error of the balance reading, the inaccuracy of the estimation of the secular change of the secondary standard resistance coil, the variation in E.M.F. of the standard cell (including polarisation during the observations), uncertainty in temperature readings, and the error introduced by the non-maintenance of an absolutely steady current. The probable observational error of the mean value of $C \times R$ at 17° C. is less than 1 in 1,000,000.

The probable error of the ratio of the diametral dimensions of the coils, viz., 5 in 1,000,000, and the uncertainty in the axial dimensions of 15 in 1,000,000 (introducing a possible uncertainty in the value of the mutual induction of about 5 in 1,000,000 and in the measurement of current of about 1 part in 100,000) have not been under-estimated. Evidence in favour of a small error is afforded by the satisfactory agreement of the calculated and observed differences of the forces due to the left and right systems when a current of 1 ampere circulates through them; in addition there is the estimate of the difference in radii of neighbouring coils from observations of the force (p. 516). These measurements lead one to suppose that the errors have been closely approximated to. The electrical method of setting the coils in position has been shown to be subject to an error not greater than 1 in 5,000,000 of the mutual induction; the magnetic susceptibility of the parts of the balance and its support is negligibly small, and the effect of the current in the leads to and from the suspended systems is too small to be measurable. The magnitudes of the errors arising from the finite thickness of the wire used, and the assumption that one of the coils is a current sheet instead of a helix, are discussed in Appendix B, and shown to be practically negligible.

The possibility of error due to the oscillation of the suspended systems has not yet been considered. For a small axial displacement of the suspended coils the force is $(1 - 11 \times 10^{-8} d^2)$ times the maximum,* where d is the axial displacement in mils from the plane of minimum mutual induction. One division of the pointer scale is equal to 3·75 mils ($= 95\mu$); the length of the pointer is 14·6 inches (37 centims.) and half

---

* See p. 502.

the length of the beam is 10 inches (25·4 centims.). A difference in doubled rest-point readings of 7·9 divisions corresponds therefore to a difference in the mean axial positions of the suspended cylinders of 10 mils (254μ). In an experiment intended as a check on the expression obtained for the change of force with small axial displacements, the doubled rest-point in a (D+S) experiment was 197·7 in one case and 189·3 in another, the latter reading being obtained by loading one end of the beam with 10 milligrammes. The correct position for maximum force corresponded to a pointer reading of 200·0. In the two experiments the difference in the balancing masses was 0·3 milligramme, corresponding to a difference in force of $0{\cdot}001_9$ per cent., and from the readings of the doubled rest-points a difference in force of $0{\cdot}001_3$ per cent. is deduced. The agreement is satisfactory. It follows that in a determination of current strength the doubled rest-point must not differ from the reading corresponding to the position of maximum force by more than 8 divisions if the error introduced by the difference in the positions is to be less than 5 in 1,000,000. When making the observations, the results of which are tabulated in Table XIII., the mean displacement of the suspended coils was always kept within 2 divisions by adjusting the position of one of the riders, and the mean displacement for all the observations is 0·5 division. The greatest error introduced on any occasion was therefore about 1 part in 3,000,000.

We have also to consider the relation between the amplitude of swing and the effective force due to the current. This relation was determined experimentally. In a particular D+S experiment the amplitude of swing was varied from 1 division to 28 divisions, but the estimated forces were identical. Other observations confirmed this result, and it was only when the amplitude was very large and the errors of observation great that any difference was observed; even these differences are of opposite signs and point to the forces being identical. It is certain that within the limits 0 to 28 divisions for the amplitude there is no measurable difference in the effective force. When determining the value of a current the amplitude was in general from 3 to 4 divisions; there is therefore no correction to be applied for the amplitude of swing.

The remaining source of error is due to an uncertainty in the value of gravity. No absolute determinations of g have been made at Teddington, and it was necessary to compare the values at Kew and Teddington by pendulum observations. Mr. E. G. CONSTABLE, of the Observatory Department of the National Physical Laboratory, made such observations in March, April, and July, 1905. The pendulums swung were half-seconds pendulums, the property of the Board of Education and used in the "Discovery" Antarctic Expedition. At Teddington two positions were chosen: one was on the concrete block on which the ampere balance stands, and the other was in a lower room maintained at a very constant temperature. At Kew the pendulums were swung in the north room of the small house to the west of the main building. The difference in period of the half-seconds pendulums was determined to be 26×10^{-7} second, the period at Teddington being the greater. Excluding observations made over 30 years ago, only two comparisons have been made interconnecting Kew with a station where g is believed to be known in absolute measure. The first of these comparisons was made by VON STERNECK in 1893, and the second by Mr. G. R. PUTNAM (U.S. Coast and Geodetic Survey) in 1900. The former of these observers assigned the value 981·160 to Kew and 981·200 to Greenwich; Mr. PUTNAM'S values are 981·199 and 981·187 respectively. It will be observed that VON STERNECK makes the value at Kew less than that at Greenwich, but all other observers make it greater.* Also the differences found between Kew and Greenwich by the latest and most complete observations (those by PUTNAM and by BURRAND, CONSTABLE and LENOX-CONYNGHAM) are very close to that given by theory. VON STERNECK observed on only two days at Kew as against six at Greenwich; thus the probabilities of serious error are much greater for Kew than for Greenwich. VON STERNECK'S value for Greenwich exceeds PUTNAM'S by 0·013, but this, if we may judge from the difference 0·019 between their values for Potsdam, represents largely a difference in what answers to their base values. **HELMERT** has accepted for Kew the value 981·200,† and it appears that no serious error is introduced by our acceptance of this value. From Mr. CONSTABLE'S observations the value of g at the National Physical Laboratory would therefore appear to be 981·19 centims./sec^2.

The theoretical difference between Kew and Teddington may be obtained from VON HELMERT'S formula. The places are very similarly situated with respect to surface strata and surroundings, and the only corrections it is necessary to apply are those for difference of latitude and difference of level. The latitude of Kew is 51° 28′ 6″, and of the National Physical Laboratory 51° 25′ 20″ approximately; the level of PUTNAM'S observations at Kew was 17 feet above mean sea-level, and at Teddington the mean level of Mr. CONSTABLE'S observations was about 34 feet. The correction for difference of latitude is $-0·0044$, and for the difference of level it is $-0·0010$; the theoretical value is therefore $981·19_5$ if Kew is $981·20_0$. The probable error of any accepted value depends, of course, on the errors of the intercomparisons and on the error of the absolute determination at the base station. It appears that these are not very large, and that we may accept the value 981·19 centims./sec^2 as correct to 3 in 100,000.

The determination of current by means of the ampere balance is therefore subject to errors of the following magnitude:—

(1) Due to uncertainty of dimensions of coils: possible error about $\pm 0·001$ per cent.

(2) Due to uncertainty in the value of g: possible error about $\pm 0·001_5$ per cent.

All the other sources of error introduce uncertainties less than $\pm 0·001$ per cent., and may be disregarded. The total error of an estimation is therefore of the order $\pm 0·002$ per cent., or 2 in 100,000.

---

* See G. P. LENOX-CONYNGHAM, 'Roy. Soc. Proc.,' A, vol. 78, p. 246, 1906.

† 'Report, Geodetic Conference of 1900,' p. 321.

As numerous determinations of the balancing masses for (D+S) and (D−S) have been made, the value of S for 1 ampere can be calculated from them with considerable accuracy. By using this value a determination of current, using both sets of coils, can be made by taking the apparent change of mass produced by a single reversal of current in the fixed coils. The necessary observations can be made in less than five minutes, so that a very short time would suffice for making an absolute determination of current in this way.

History of the Standard Cell employed.—When the first determination of current was made, the cadmium cell chosen for insertion in the potentiometer circuit was one whose E.M.F. was lower than that of normal cells by 0·11 millivolt. Originally it was not proposed to use this cell permanently, but as its previous history indicated it to have remained very constant, it was afterwards decided to do so. The cell was compared with other standard cells on each day that a determination of current was made and on many other intermediate days. All the cells were constructed in the manner described by one of us (F. E. S.) in the 'Report of the British Association,' Section A, 1905, and were set up at the National Physical Laboratory. In the first few determinations the cadmium cell was in the same room as the ampere balance, and its temperature sometimes varied from 6° C. to 19° C. within 24 hours. Careful observations showed that the E.M.F. of the cell did not very closely follow this rapid change in temperature, and the corrections to the value of C × R in Table XIII., Column 9, were obtained from a curve which, though not very different from the temperature-coefficient curve of the cell, is not identical with it. This statement applies to the first twelve observations only, for on and after November 23, 1905, the cell was kept in the resistance-standards room, which is maintained at a nearly constant temperature of 17° C. After November 23, the correction to 17° C. was obtained from the temperature-coefficient formula

$$E_t = E_{17} - 3{\cdot}4_5 \times 10^{-5}(t-17) - 0{\cdot}066 \times 10^{-5}(t-17)^2.$$

This formula is the result of a determination made at the National Physical Laboratory, the range of temperature during the observations being 10° C. to 30° C. The coefficients are practically identical with those given by JAEGER and KAHLE.[*] Their formula is

$$E_t = 1{\cdot}0186 - 0{\cdot}000038\,(t-20) - 0{\cdot}00000065\,(t-20)^2.$$

The cell employed in the potentiometer circuit (hereafter called No. 2) was set up in January, 1905; those with which it has been compared were set up on various dates ranging from October, 1904, to April, 1907. The comparisons indicate that the cells have remained constant within a few hundred-thousandths of a volt, or have changed uniformly. The actual differences between the cells are not given here, but may be summarised by saying that with the exception of cell No. 2 the greatest

---

[*] 'Zeitschr. f. Instrumentenk.,' 1898, p. 161.

difference in E.M.F. of any cell from the mean E.M.F. of all of them is 0·03 millivolt, and the difference between the mean E.M.F. of the old cells and the new cells set up in March and April, 1907, is 0·02 millivolt. This comparison indicates constancy of the old cells; Table XIV. confirms this view. The mean difference of the "old and new cells" and cell No. 2 is 0·11 millivolt. On September 13, 1906, and on April 10 and 11, 1907, a cell representing the mean normal cell was employed in the determination of current. The results are contained in Table XIV.

The mean value of $C \times R$ at 17° C. is $1·01830_9$; the value from comparison with cell No. 2 is $1·01830_7$. Both these values assume g to be 981·20; correcting for the difference of this and the accepted value 981·19, we obtain

$$1·01830$$

as the mean value of $C \times R$ at 17° C.

It should be pointed out that the "international ohm" used in these measurements is that employed at the National Physical Laboratory, which unit does not differ by more than 3 parts in 100,000 from that of the Reichsanstalt. In absolute measure, however, its value is not known to a high degree of accuracy. Taking its ratio to the Board of Trade ohm as determined by one of us (F. E. S.) in 1903 ('B.A. Report,' 1903, and 'Phil. Trans.,' A, vol. 204) as 1 international ohm = $1·0001_5$ B.O.T. ohm, and assuming that the B.O.T. unit has remained constant since 1897, when its value in C.G.S. units was found to be $1·00026^* \times 10^9$, we get 1 international ohm = $1·00041 \times 10^9$ C.G.S. units, and the E.M.F. of the normal cadmium cell at 17° C. becomes

$$1·0187_1 \times 10^8 \text{ C.G.S. units (approximately).}$$

This number must, however, be considered as provisional only, pending a redetermination of the international ohm in absolute measure.

It is of interest to compare our value of $C \times R$ in terms of the international ohm with that obtained by GUTHE in 1906.[†] He gives the number 1·01853 as the E.M.F. at 20° C. of the E, K, and O series of cells set up with electrolytically prepared paste, which cells are comparable with the "normal" cell used in our determination. Allowing for difference of temperature, our value of $C \times R$ at 20° C. becomes 1·01819, a difference of 34 parts in 100,000.

As regards the Clark cell, the mean of a number of comparisons made at the National Physical Laboratory gives the ratio

$$\text{Clark at } 15^\circ \text{ C.} \div \text{Cadmium at } 17^\circ \text{ C.} = 1·406_6,$$

---

[*] "On a Determination of the Ohm, &c.," by Professor W. E. AYRTON, F.R.S., and Professor J. V. JONES, F.R.S. 'B.A. Report,' 1897.

[†] "A New Determination of the Electromotive Force of WESTON and CLARK'S Standard Cells by an Absolute Electrodynamometer," 'United States Bulletin,' vol. 2, p. 69.

TABLE XIV.—Normal Cadmium Cell.

Date.	Observations.		Sum of masses $=m'$.	Mean tempera-ture of cell.	Mean tempera-ture of coil.	R = value of coil in international ohms.	C = value of current = $\sqrt{m'}/\sqrt{4m}$.*	C × R.	C × R corrected to 17° C.	Difference from mean (1×10^{-6}).
	D + S, balancing mass.	D − S, balancing mass.								
	grammes	grammes	grammes	° C.	° C.		amperes			
13.9.1906	15·7193	15·3796	31·0989	17·25	19·41	$1{\cdot}00012_5$	$1{\cdot}01817_4$	$1{\cdot}01830_1$	$1{\cdot}01831_0$	$+0_1$
13.9	185	795	0980	17·25	19·80	13_0	15_9	29_1	30_0	-0_9
9.4.1907	197	806	1003	17·31	14·75	9_5	19_7	29_4	30_5	-0_4
10.4	189	799	0988	17·20	16·43	12_4	17_3	30_0	30_7	-0_2
11.4	202	813	1015	17·20	14·57	9_2	21_7	31_1	31_8	$+0_9$
11.4	190	799	0989	17·20	16·90	13_2	17_4	30_8	31_5	$+0_6$
								Mean =	$1{\cdot}01830_9$	$\pm 0_5$

* Formula (12), p. 510.

[*Note added January* 11*th*, 1908.—Two determinations of the E.M.F. of the normal cadmium cell were made on January 6th and January 8th, 1908, after resetting the balance; both the tests gave the value of C × R (corrected to 17° C.) as $1{\cdot}01831_0$, a number practically identical with the mean of Table XIV.]

and using this ratio we get

$$C \times R \text{ for Clark cell at } 15^\circ \text{ C.} = 1{\cdot}432_3\,;$$

$$\text{Guthe's value of } C \times R \text{ for Clark cell at } 15^\circ \text{ C.} = 1{\cdot}43296.$$

The difference is in the same direction as that between the cadmium cells, but greater in proportion.

SECTION 13.—CONCLUSIONS.

From the measurements and observations detailed in the previous pages we may conclude that the current weigher, constructed on the lines described, is a most excellent instrument, capable of yielding results of very high precision, and worthy of acceptance as an international standard instrument for the absolute determination of the ampere. We therefore hope that other countries will make balances on similar lines, in order to realise one of the fundamental electrical units in an exact manner.

So far as we are aware, the accuracy attainable by the new balance far exceeds that secured in any previous absolute determination of any electrical unit, and we may infer that of all the electrical units the ampere is now the one best known.

Further, we may infer that cadmium cells can be set up so as to be remarkably constant in E.M.F. The observations made on cell No. 2, set up by one of us (F. E. S.), extended over a period of 19 months, and during the whole of that period its measured E.M.F. seldom differed from the mean by more than 1 part in 100,000.

Of the 71 determinations of E.M.F. made—

7	are within	1	in	1,000,000	of	the mean,
14	,,	2	,,	1,000,000	,,	,,
28	,,	5	,,	1,000,000	,,	,,
53	,,	10	,,	1,000,000	,,	,,
66	,,	15	,,	1,000,000	,,	,,
70	,,	20	,,	1,000,000	,,	,,

Only one determination out of the whole 71, and this one of the earliest, differs from the mean by so much as 1 part in 59,000.

It is of interest to mention that of the 71 determinations just referred to 26 were made by the same pair of observers (T. M. and F. E. S.), and these show a still closer agreement, viz., of 26 determinations—

6	are within	1	in	1,000,000	of	the mean,
8	,,	2	,,	1,000,000	,,	,,
11	,,	5	,,	1,000,000	,,	,,
19	,,	10	,,	1,000,000	,,	,,
25	,,	15	,,	1,000,000	,,	,,

Only the early one previously mentioned differed from the mean by more than

1 part in 70,000. The difference between the means of the 26 and the 71 determinations is 1 in 1,000,000.

These results are of considerable importance, as they show very great constancy both of current weigher and cell. In fact, the cell and balance proved to be much more constant and reliable than the standard resistance, although the latter was very carefully made and annealed with a view to ensuring permanency.

The precision of measurement attainable with the new balance exceeds the most sanguine expectations of its designers. It was intended to give the ampere to 1 in 10,000, and an accuracy of 1 in 20,000 was hoped for, but 1 in 50,000 has been attained. The instrument itself admits of a far higher accuracy, for a tenth of a milligramme can be detected with certainty, and this, in a total of 15 grammes, the balancing mass for 1 ampere, means 1 in 300,000 in the value of the current. This is a precision considered to be of a very high order, even for relative measurements. Uncertainty, however, exists as to the value of g, and the axial lengths of the coils, which prevent the highest accuracy of which the balance is capable, being realised at present.

Directions in which improvements may be looked for are, therefore :—

(i) A more accurate determination of the acceleration due to gravity, and
(ii) Greater precision in the means for measuring the axial lengths of the coils, or a lengthening of the coils to reduce the effect of this possible error.

As the uncertainty in g is of most consequence, we trust that an absolute determination of its value at the National Physical Laboratory will, ere long, be made.

To realise the volt to an accuracy approaching that of the ampere as now known, it is necessary that an absolute determination of resistance of corresponding precision be undertaken. At the present time the uncertainty in the absolute value of the international ohm, in terms of which our values of $C \times R$ for the cadmium cells are expressed, approximates to 4 in 10,000, so it is of considerable importance that a better determination be made at an early date.

In conclusion, we desire to express our sincere thanks to the British Association for providing the funds with which to construct the ampere balance, and to Sir Andrew Noble, F.R.S., for presenting the adjustable stand to support the instrument.

Our most hearty thanks are hereby tendered to Dr. R. T. Glazebrook, F.R.S., Director of the National Physical Laboratory, for supervising the construction of the electrical portions of the balance, for the keen interest he has taken in the experiments, and also for having placed the very perfect resources of the Laboratory at our disposal. Indeed, much of the precision attained in the results is due to the facilities available at the National Physical Laboratory for such work. To Dr. T. E. Stanton we are indebted for superintending the turning of the marble cylinders used to support the coils of the balance.

Our best thanks are also due to Mr. J. P. Gregory for valuable assistance rendered

in the design, and for the care and skill displayed in making the drawings of the instrument; to Messrs. E. Fisher and A. W. Harrold, late of the Central Technical College, for checking the initial calculations; and to Professor A. G. Greenhill, F.R.S., for advice concerning the elliptic integrals involved.

APPENDIX A.

Values of coefficients (logs of) and constant terms in series* for complete elliptic integrals of the first and second kinds (F and E) when k nearly $= 1$. $k' = \sqrt{1-k^2}$.

$$\begin{aligned} \mathrm{F}(k) = \log_e \frac{4}{k'} &+ \frac{1^2}{2^2} k'^2 \left(\log_e \frac{4}{k'} - \frac{2}{1\,.\,2}\right) \\ &+ \frac{1^2\,.\,3^2}{2^2\,.\,4^2} k'^4 \left(\log_e \frac{4}{k'} - \frac{2}{1\,.\,2} - \frac{2}{3\,.\,4}\right) \\ &+ \frac{1^2\,.\,3^2\,.\,5^2}{2^2\,.\,4^2\,.\,6^2} k'^6 \left(\log_e \frac{4}{k'} - \frac{2}{1\,.\,2} - \frac{2}{3\,.\,4} - \frac{2}{5\,.\,6}\right) \\ &+ \;\&\mathrm{c}. \end{aligned}$$

This may be written

$$\begin{aligned} \mathrm{F}(k) = \log_e \frac{4}{k'} + \mathrm{A}_2 k'^2 \left(\log_e \frac{4}{k'} - \mathrm{B}_2\right) + \mathrm{A}_4 k'^4 \left(\log_e \frac{4}{k'} - \mathrm{B}_4\right) \\ + \mathrm{A}_6 k'^6 \left(\log_e \frac{4}{k'} - \mathrm{B}_6\right) + \;\&\mathrm{c}. \end{aligned}$$

Similarly the corresponding series for E (k) may be written

$$\begin{aligned} \mathrm{E}(k) = 1 + \mathrm{A}_2' k'^2 \left(\log_e \frac{4}{k'} - \mathrm{B}_2'\right) + \mathrm{A}_4' k'^4 \left(\log_e \frac{4}{k'} - \mathrm{B}_4'\right) \\ + \mathrm{A}_6' k'^6 \left(\log_e \frac{4}{k'} - \mathrm{B}_6'\right) + \;\&\mathrm{c}. \end{aligned}$$

Values of log A_n, log A_n', B_n, and B_n', are given below:—

n.	For F (k).		For E (k).	
	Log A_n.	B_n.	Log A_n'.	B_n'.
2	$\bar{1}\cdot 3979400$	$1\cdot 0$	$\bar{1}\cdot 6989700$	$0\cdot 5$
4	$\bar{1}\cdot 1480625$	$1\cdot 1\dot{6}$	$\bar{1}\cdot 2730013$	$1\cdot 083$
6	$\bar{2}\cdot 9897000$	$1\cdot 2\dot{3}$	$\bar{1}\cdot 0688813$	$1\cdot 20$
8	$\bar{2}\cdot 8737161$	$1\cdot 269047$	$\bar{2}\cdot 9317080$	$1\cdot 251190$
10	$\bar{2}\cdot 7822011$	$1\cdot 291269$	$\bar{2}\cdot 8279587$	$1\cdot 280159$
12	$\bar{2}\cdot 7066240$	$1\cdot 306421$	$\bar{2}\cdot 7444126$	$1\cdot 298846$
14	$\bar{2}\cdot 6422546$	$1\cdot 317410$	$\bar{2}\cdot 6744393$	$1\cdot 311916$
16	$\bar{2}\cdot 5861971$	$1\cdot 325743$	$\bar{2}\cdot 6142259$	$1\cdot 321577$
18	$\bar{2}\cdot 5365499$	$1\cdot 332279$	$\bar{2}\cdot 5613736$	$1\cdot 329011$
20	$\bar{2}\cdot 4919971$	$1\cdot 337542$	$\bar{2}\cdot 5142737$	$1\cdot 334911$

---

* Cayley, 'Elliptic Functions,' chap. III., § 77.

APPENDIX B.

On the Forces between Coils of Wire of Finite Section.[*]

The formula developed by J. VIRIAMU JONES gives the force when the windings of the coils can be treated as infinitely fine helical filaments. In the ampere balance, however, the wires are of finite thickness, and thus small corrections may become necessary.

If the force parallel to the axis experienced by a helical filament of radius A and of fixed pitch and number of turns when carrying a current i be F, we have

$$\mathrm{F} = i\int_0^\theta \mathrm{XA}\, d\theta \quad . \quad . \quad . \quad . \quad . \quad . \quad . \quad . \quad . \quad . \quad (1),$$

where X is the magnetic force at right angles to the axis and θ is measured round the axis. If y be the co-ordinate, parallel to the axis, of one end of the helix, the force on the helix in a magnetic field symmetrical about the axis is a function of A and y, and we have

$$\frac{d^2\mathrm{F}}{d\mathrm{A}^2}+\frac{d^2\mathrm{F}}{dy^2} = i\int_0^\theta \mathrm{A}\left(\frac{d^2\mathrm{X}}{d\mathrm{A}^2}+\frac{d^2\mathrm{X}}{dy^2}+\frac{2}{\mathrm{A}}\frac{d\mathrm{X}}{d\mathrm{A}}\right)d\theta \quad . \quad . \quad . \quad . \quad . \quad . \quad (2).$$

Now, if V be the magnetic potential of the magnetic field, V is symmetrical about the axis, and hence satisfies LAPLACE'S equation

$$\frac{d^2\mathrm{V}}{d\mathrm{A}^2}+\frac{d^2\mathrm{V}}{dy^2}+\frac{1}{\mathrm{A}}\frac{d\mathrm{V}}{d\mathrm{A}} = 0 \quad . \quad . \quad . \quad . \quad . \quad . \quad . \quad . \quad . \quad (3).$$

But $\mathrm{X} = -d\mathrm{V}/d\mathrm{A}$, and hence, differentiating (3) with respect to A,

$$\frac{d^2\mathrm{X}}{d\mathrm{A}^2}+\frac{d^2\mathrm{X}}{dy^2}+\frac{2}{\mathrm{A}}\frac{d\mathrm{X}}{d\mathrm{A}} = \frac{1}{\mathrm{A}}\frac{d\mathrm{X}}{d\mathrm{A}}+\frac{\mathrm{X}}{\mathrm{A}^2}.$$

Thus

$$\frac{d^2\mathrm{F}}{d\mathrm{A}^2}+\frac{d^2\mathrm{F}}{dy^2} = i\int_0^\theta\left(\frac{d\mathrm{X}}{d\mathrm{A}}+\frac{\mathrm{X}}{\mathrm{A}}\right)d\theta = \frac{1}{\mathrm{A}}\frac{d\mathrm{F}}{d\mathrm{A}} \quad . \quad . \quad . \quad . \quad . \quad . \quad (4).$$

This is similar to MAXWELL'S theorem[†] for mutual induction.

Distribution of Current in the Wire.—In default of any accurate knowledge of the variations of specific resistance over the cross-section of the wire forming a helical coil, it is impossible to accurately determine the distribution of current in the wire. We shall, however, examine the case in which the specific resistance is uniform and shall call the corresponding distribution of current the "natural" distribution. The current density at any point may be taken as inversely proportional to the length of

---

[*] For the major portion of the following treatment we are indebted to Mr. G. F. C. SEARLE, F.R.S.

[†] MAXWELL, 'Electricity and Magnetism,' 3rd ed., vol. ii., § 703.

one turn of the line of flow through that point. Hence, if the distance of the point from the axis is $A+h$, the current density is equal to $Ki[(A+h)^2+p^2]^{-1/2}$, where K is a constant, $2\pi p$ is the pitch of the helix, and i is the total current through the wire. To find u, the current per unit area of the section by a plane containing the axis of the helix, we must multiply the current density by $\cos\alpha$, where α is the slope of the line of flow. Hence

$$u = Ki(A+h)/\{(A+h)^2+p^2\} \quad . \quad . \quad . \quad . \quad . \quad . \quad . \quad . \quad . \quad (5).$$

The constant K is to be determined from the condition that the total current in the wire is i. When, as in the case of the coils of the ampere balance, p is small compared with $A+h$, it will be sufficient to take the first two terms of the expansion of (5) in powers of p^2, and to write

$$u = Ki\left\{\frac{1}{A+h} - \frac{p^2}{(A+h)^3}\right\} \quad . \quad . \quad . \quad . \quad . \quad . \quad . \quad . \quad . \quad (6).$$

If h, y be the co-ordinates of the point relative to axes through the centre of the section parallel and perpendicular to the axis, we can write

$$h = \rho\cos\phi, \quad y = \rho\sin\phi \quad . \quad . \quad . \quad . \quad . \quad . \quad . \quad . \quad . \quad (7).$$

Thus, if R is the radius of the wire,

$$i = \int_0^R\int_0^{2\pi} u\rho\, d\rho\, d\phi = Ki\int_0^R\int_0^{2\pi}\left\{\frac{1}{A+\rho\cos\phi} - \frac{p^2}{(A+\rho\cos\phi)^3}\right\}\rho\, d\rho\, d\phi.$$

Now, since ρ is less than A,

$$\int_0^{2\pi}\frac{d\phi}{A+\rho\cos\phi} = \frac{2\pi}{(A^2-\rho^2)^{1/2}},$$

and two applications of the reduction formula

$$\int_0^{2\pi}\frac{d\phi}{(A+\rho\cos\phi)^{m+1}} = \frac{1}{A}\left(1+\frac{\rho}{m}\frac{d}{d\rho}\right)\int_0^{2\pi}\frac{d\phi}{(A+\rho\cos\phi)^m}$$

give

$$\int_0^{2\pi}\frac{d\phi}{(A+\rho\cos\phi)^3} = 2\pi\left\{\frac{3A^2}{2(A^2-\rho^2)^{5/2}} - \frac{1}{2(A^2-\rho^2)^{3/2}}\right\}.$$

On integrating with respect to ρ, we find

$$\frac{1}{K} = 2\pi\left\{A-(A^2-R^2)^{1/2} - \frac{p^2R^2}{2(A^2-R^2)^{3/2}}\right\}$$
$$= \frac{\pi R^2}{A}\left(1+\frac{R^2-2p^2}{4A^2}\right)$$

as far as terms involving R^4 or R^2p^2. Hence, to the same order,

$$K = \frac{A}{\pi R^2}\left(1-\frac{R^2-2p^2}{4A^2}\right) \quad . \quad . \quad . \quad . \quad . \quad . \quad . \quad . \quad . \quad . \quad (8).$$

If F_0 be the force parallel to the axis, experienced by the helical filament defined by $h = 0$, $y = 0$, and if F' be the force on the helical wire when carrying the same current, we have

$$F' = \frac{1}{i}\int_0^A\int_0^{2\pi} u\left(F_0+h\frac{dF}{dx_0}+y\frac{dF}{dy_0}+\ldots\right)\rho\, d\rho\, d\phi \quad . \quad . \quad . \quad . \quad . \quad (9),$$

where the force on the helix h, y is expanded by TAYLOR's theorem. On integration the first term yields F_0 exactly, since the total current is i. For the other terms we may use (6), and may replace $(A+h)^{-1}$ by $A^{-1}-hA^{-2}+h^2A^{-3}$ and $p^2(A+h)^{-3}$ by p^2A^{-3}. When we substitute for h and y from (7) and integrate, we obtain

$$F' = F_0+\frac{\pi KR^4}{A}\left\{\frac{1}{8}\left(\frac{d^2F}{dx_0^2}+\frac{d^2F}{dy_0^2}\right)-\frac{1}{4A}\frac{dF}{dx_0}+\frac{1}{A^2}\frac{d^2F}{dx^2}\left(\frac{R^2}{48}-\frac{p^2}{8}\right)+\frac{1}{A^2}\frac{d^2F}{dy_0^2}\left(\frac{R^2}{16}-\frac{p^2}{8}\right)\right\}.$$

Using (4), and inserting the value of K, we find

$$F' = F_0-\frac{R^2}{8A}\left(1-\frac{R^2-2p^2}{4A^2}\right)\left\{\frac{dF}{dx_0}\left(-1+\frac{R^2-2p^2}{2A^2}\right)-\frac{R^2}{3A}\frac{d^2F}{dx_0^2}\right\},$$

or, as far as the terms involving R^4 or R^2p^2,

$$F' = F_0-\frac{R^2}{8A}\left\{1-\frac{3(R^2-2p^2)}{4A^2}\right\}\frac{dF}{dx_0}-\frac{R^4}{24A^2}\frac{d^2F}{dx_0^2}.$$

This expression includes all the terms up to R^4 or R^2p^2 arising from the differential coefficients of not greater than the second order in the Taylor expansion in (9).

In the case of the ampere balance it is unnecessary to go beyond terms involving R^2. To this order we have

$$F' = F_0-\frac{R^2}{8A}\frac{dF}{dx_0}. \quad . \quad . \quad . \quad . \quad . \quad . \quad . \quad . \quad . \quad . \quad (10).$$

It is easy to give a physical interpretation to this result. For, if we take a helical filament of radius $A-z$, with its ends in the same planes as the centres of the terminal sections of the helical wire, the force on it is

$$F_0-z\frac{dF}{dx_0}+\tfrac{1}{2}z^2\frac{d^2F}{dx_0^2}-\ldots.$$

The first two terms of this series will be the same as the terms shown in (10) if $z = R^2/8A$. Hence, as far as correcting terms involving R^2, F' is the force on a helix of radius $A-R^2/8A$. Thus, the force experienced by a wire helix of mean radius A is the same as that experienced by a filamentary helix of radius $A-R^2/8A$. It is noteworthy that, to this approximation, no correction is to be applied to the axial length of the coil. The argument applies also to the fixed coils of the balance.

For "natural" distribution of current in the coils of the ampere balance, the force F calculated on p. 509 is too great. The corrected value of the force is

$$\mathrm{F}-\frac{\mathrm{R}^2}{8a}\frac{d\mathrm{F}}{da}-\frac{\mathrm{R}^2}{8\mathrm{A}}\frac{d\mathrm{F}}{d\mathrm{A}} \quad . \quad . \quad . \quad . \quad . \quad . \quad . \quad . \quad . \quad . \quad (11),$$

where a and A are the mean radii of the suspended and fixed coils. We may write (11) in the form

$$\mathrm{F}\left(1-\frac{\mathrm{R}^2}{8a^2}r-\frac{\mathrm{R}^2}{8\mathrm{A}^2}q\right),$$

where

$$r=\frac{a}{\mathrm{M}}\frac{d\mathrm{M}}{da}=\frac{a}{\mathrm{F}}\cdot\frac{d\mathrm{F}}{da} \quad \text{and} \quad q=\frac{\mathrm{A}}{\mathrm{M}}\frac{d\mathrm{M}}{d\mathrm{A}}=\frac{\mathrm{A}}{\mathrm{F}}\cdot\frac{d\mathrm{F}}{d\mathrm{A}}.$$

Inserting the values of R, q, r, A, and a, tabulated on pp. 488, 512, 513, we obtain a correction to the force of 17 parts in 10,000,000 for the complete system of coils. The sign of the correction is negative.

If we assume the current density to be uniform, the force in this case is found by making $u = i/\pi\mathrm{R}^2$ in (9), and the corrected value of the force is

$$\mathrm{F}+\frac{\mathrm{R}^2}{8a}\frac{d\mathrm{F}}{da}+\frac{\mathrm{R}^2}{8\mathrm{A}}\frac{d\mathrm{F}}{d\mathrm{A}}.$$

The correction is of the same value as before, but of opposite sign. As the distribution of current is uncertain, the value of the force stated on p. 509 has been used throughout our work.

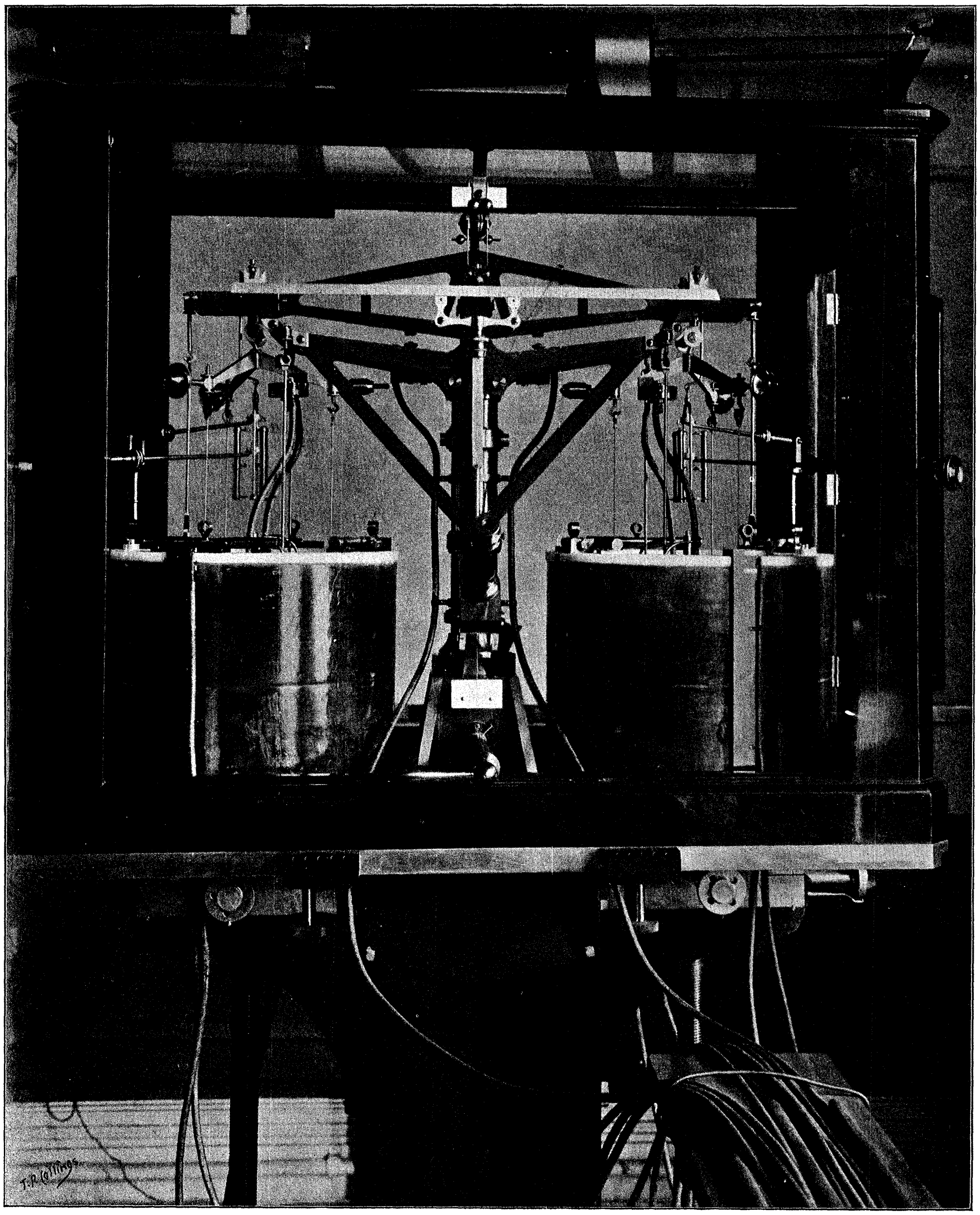

Fig. 2. Complete current weigher (sides of case removed).

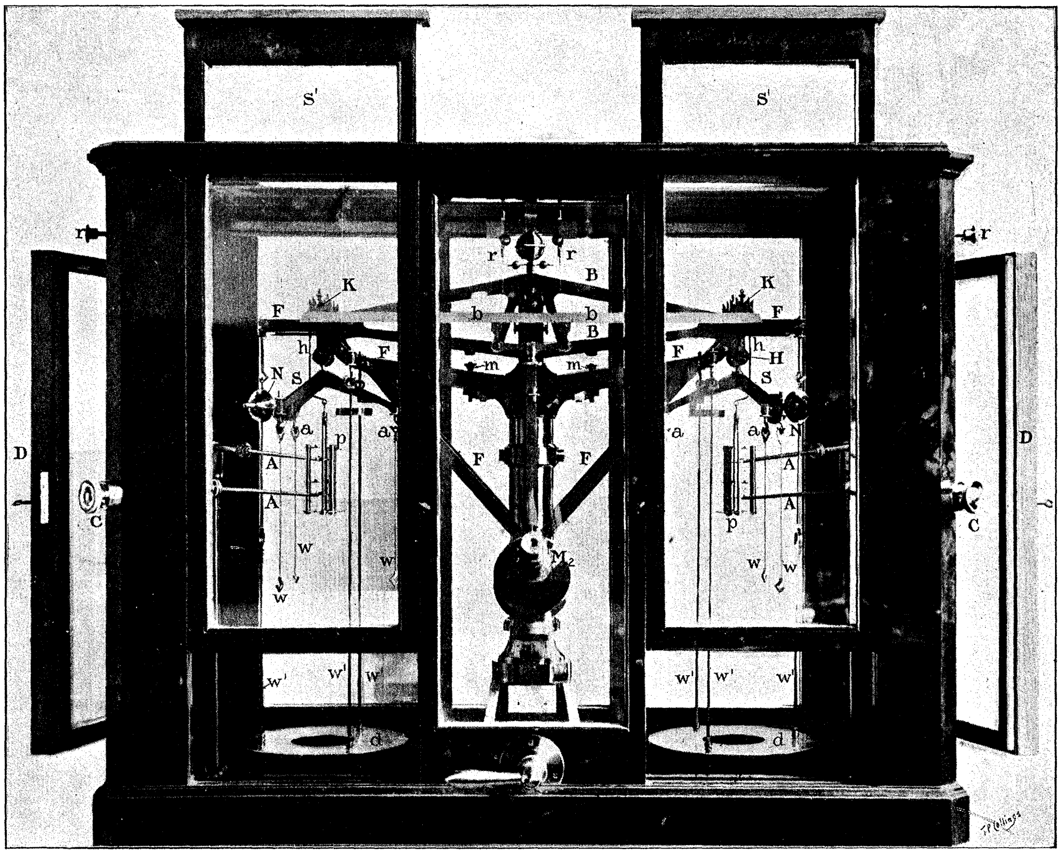

Fig. 6. General view of physical balance (without coils).

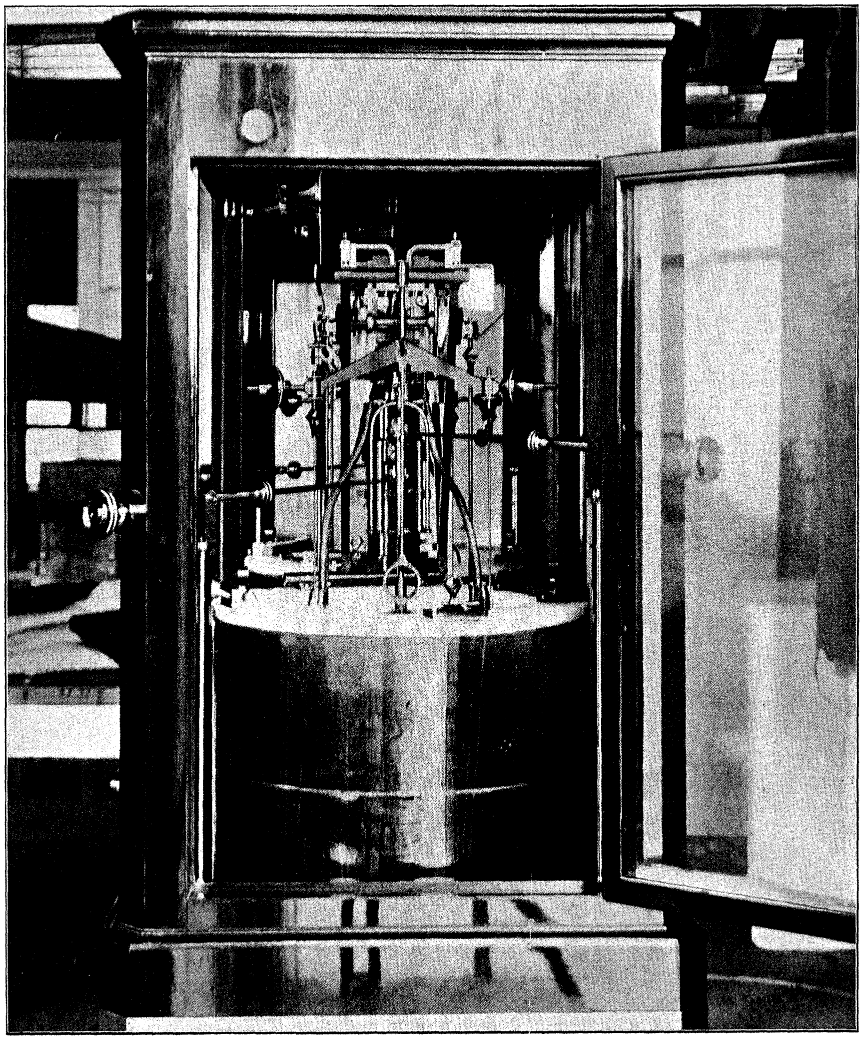

Fig. 7*a*. End view of current weigher.

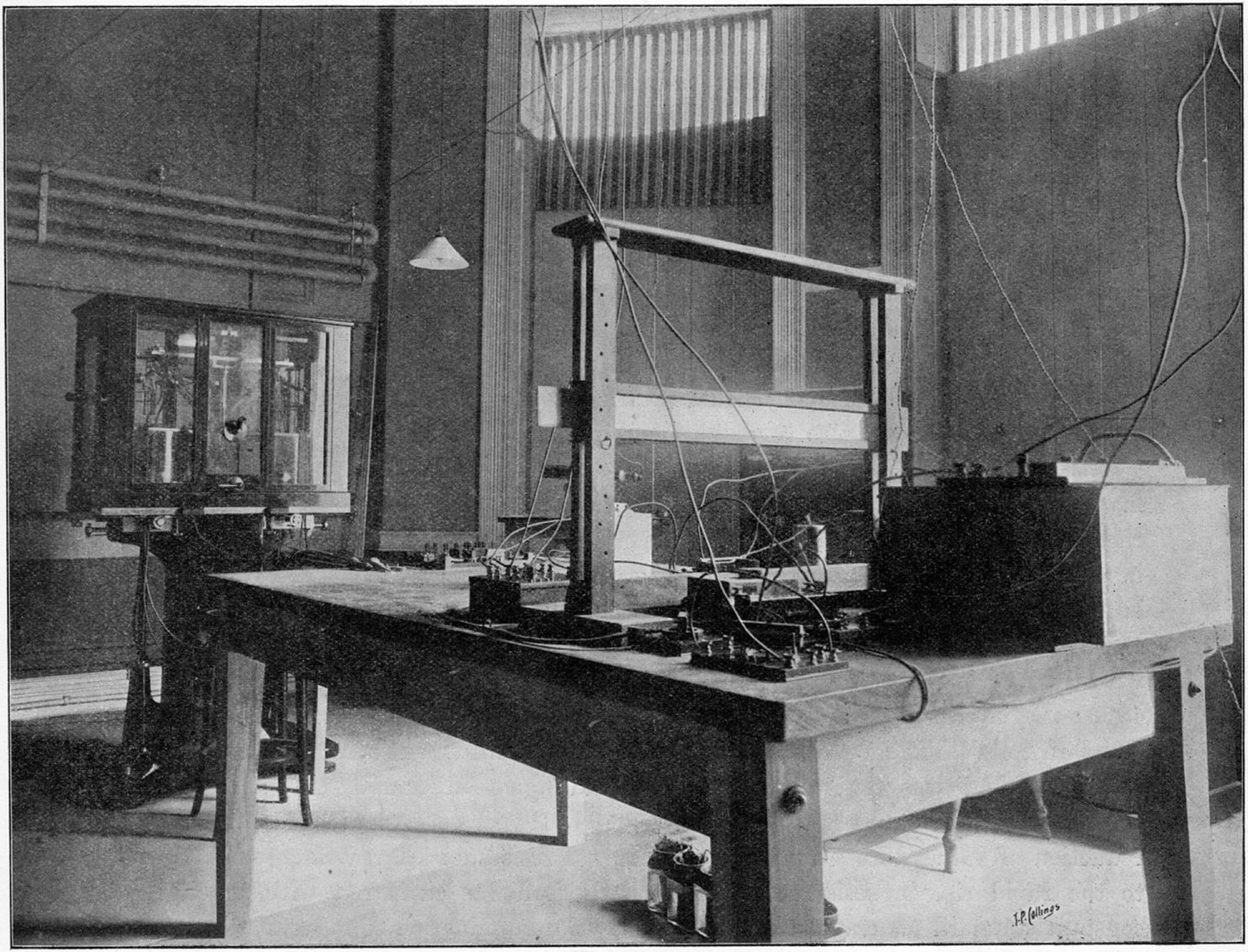

Fig. 24. General view of apparatus.

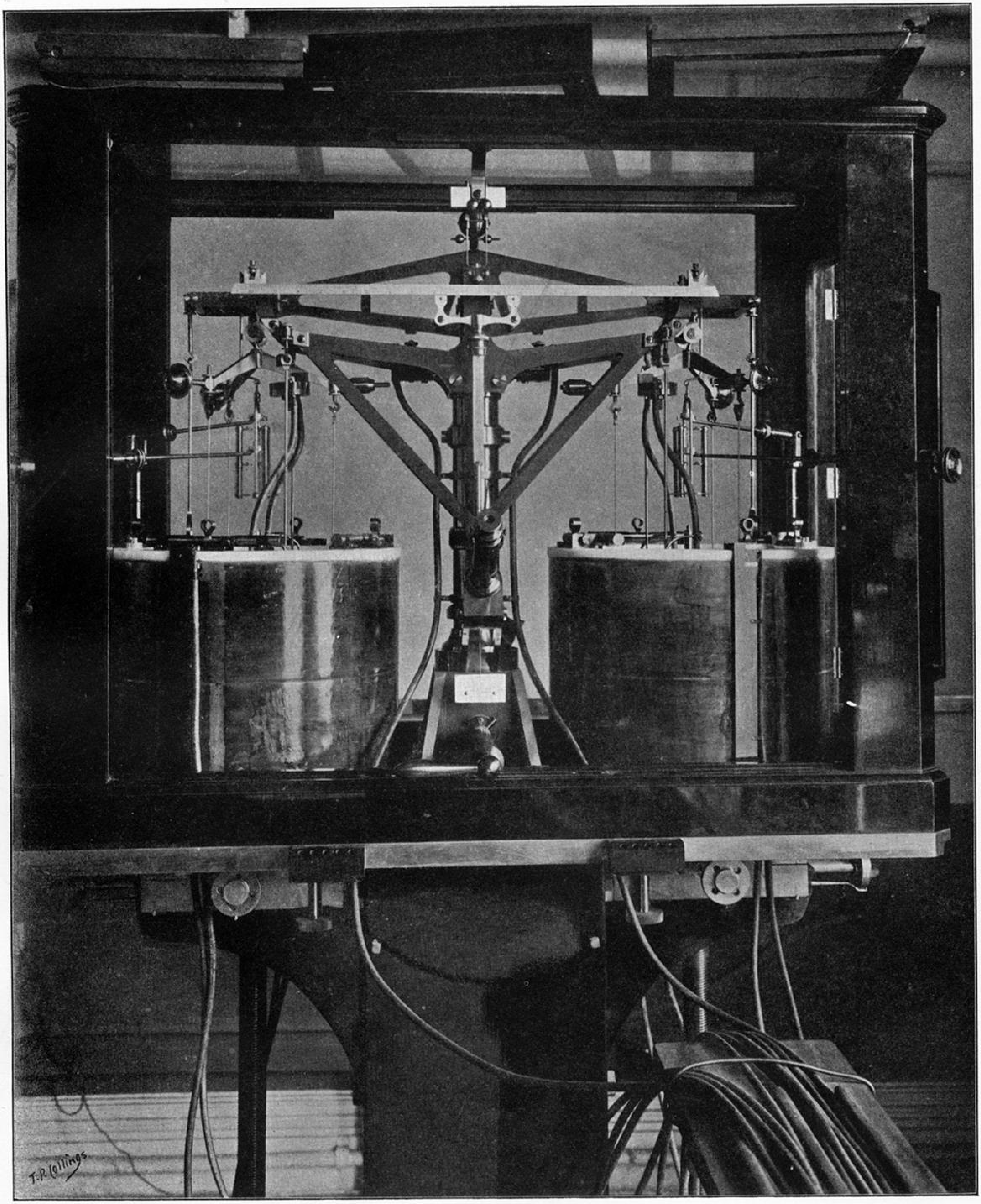

Fig. 2. Complete current weigher (sides of case removed).

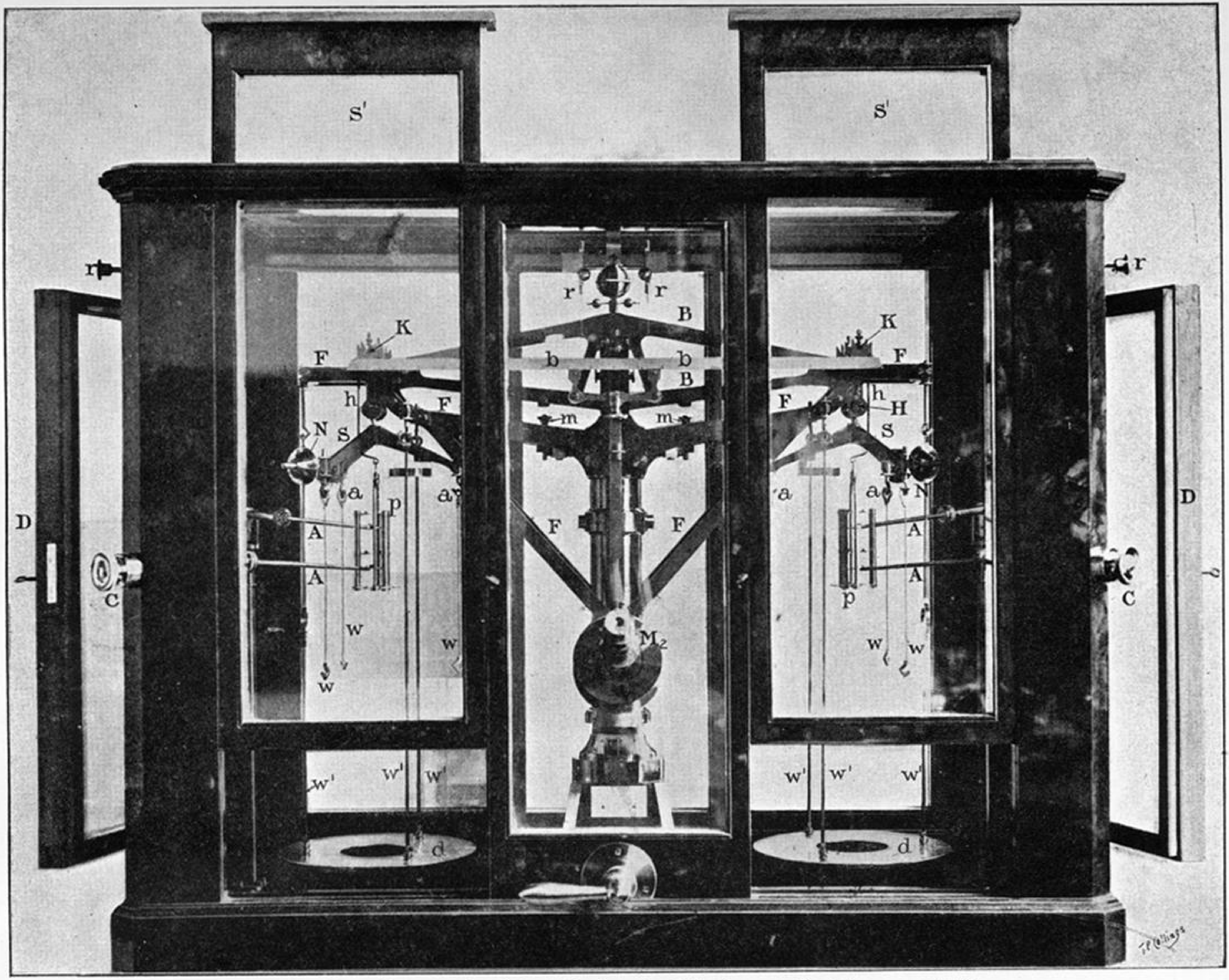

Fig. 6. General view of physical balance (without coils).

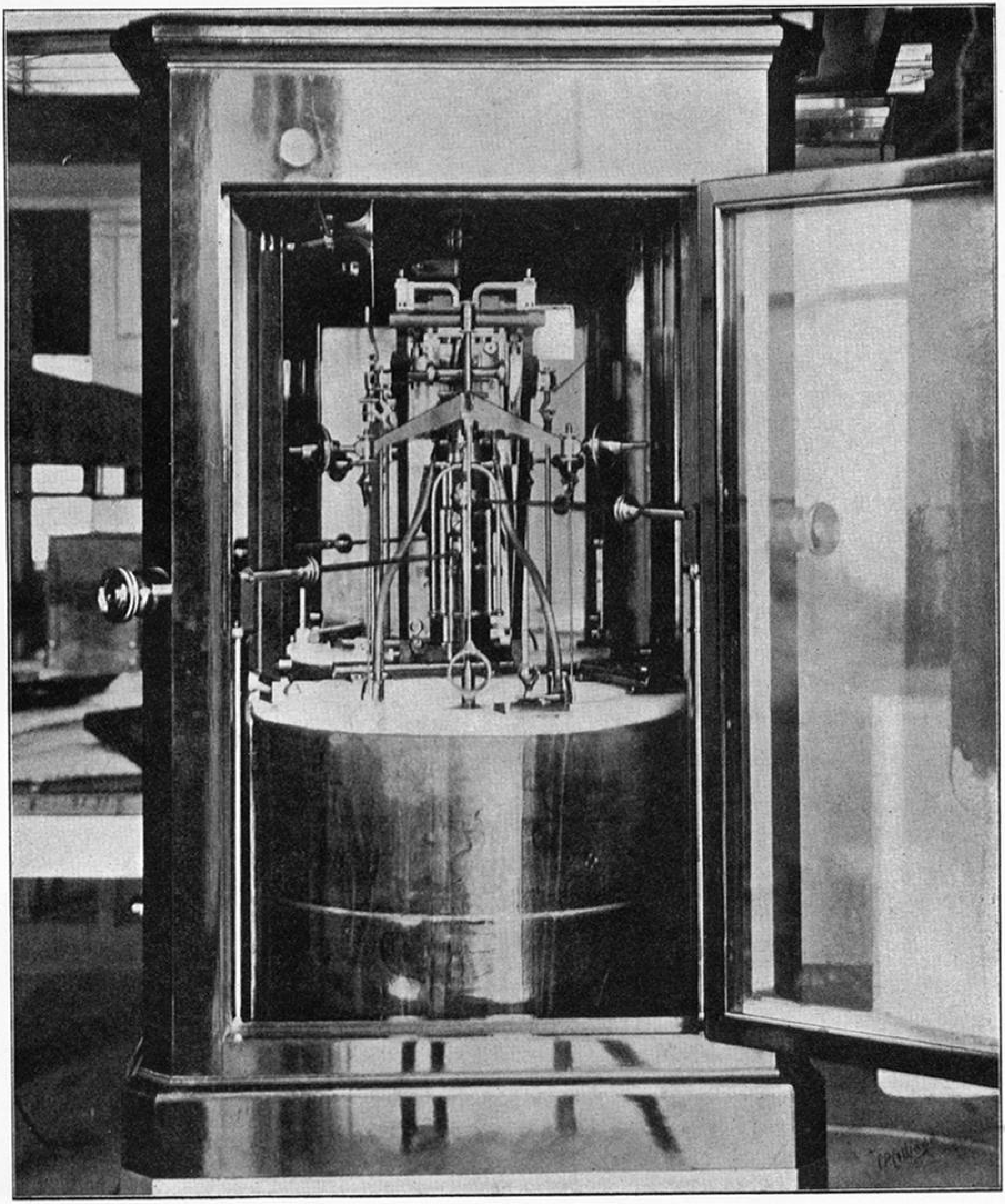

Fig. 7*a*. End view of current weigher.